ESTUN
AUTOMATION

MOTION
CONTROL




# EMP800 Series

## Programmable Logic Controller User Manual

V1.01

CORE COMPONENT OF AUTOMATION
MOTION CONTROL SOLUTIONS

INDUSTRIAL ROBOT
ENGINEERING OF INTELLIGENT SYSTEMS

DIGITAL PRODUCT
DIGITAL SERVICE

# Statement

## Copyright and Intellectual Property

This brochure and all text, images, design, software and related information contained therein (collectively referred to as "Documentation Materials") are the exclusive property of Nanjing ESTUN Automation Co., Ltd. ("ESTUN Company") and are protected by the People's Republic of China and relevant international copyright laws and treaties. Any form of reproduction, distribution, modification, public display or reverse engineering of the material in this document is strictly prohibited unless expressly authorized in writing by ESTUN Corporation.

## Disclaimer

1. ESTUN Company is committed to ensuring the accuracy of the information in the brochure, but makes no warranty, express or implied, as to its completeness, accuracy or error-free. ESTUN Company will periodically proofread the contents of this manual and make necessary changes in subsequent editions, while reserving the right to make technical changes without affecting the functionality without prior notice.
2. Safe operation is the primary responsibility of the user. It is the robot owner's responsibility to ensure that all personnel are adequately trained and the personnel install, operate and maintain this product in strict compliance with this manual, all relevant safety regulations and national, regional and industry standards. ESTUN Company will not be responsible for any personal injury, equipment damage or production loss caused by non-compliance with operating procedures, unauthorized modification or use of non-original spare parts.
3. Under no circumstances shall ESTUN be liable for any consequential damages, such as consequential losses, incidental losses, loss of profits, loss of data or interruption of production, arising from the use or inability to use this product and manuals.

## Documentation Declaration

1. This manual is the "Original Instruction", which is verified and confirmed by the manufacturer ESTUN Corporation.
2. Translations of this manual in other languages may be requested from the manufacturer or its authorized representative.

# Symbol Conventions

The following safety labels appearing in this manual are the basis of core operation and safety guidelines. When reading the contents of the manual, users must carefully study the corresponding instructions of the labels, strictly abide by relevant requirements, and avoid safety risks.

| Symbols | Definition |
| --- | --- |
|  Danger | • This symbol indicates an extremely high potential hazard. Failure to avoid the associated risks will result in fatal injury or severe bodily harm. All relevant safety requirements must be strictly observed. |
|  Warning | • This symbol indicates moderate or low potential hazards. Ignoring the relevant instructions may result in minor or moderate personal injuries. Standard operating procedures must be followed to avoid risks. |
|  Cautions | • This symbol indicates potential risks that will not cause personal injury. Disregarding the relevant instructions may lead to equipment damage, data loss, degraded device performance or other unforeseen adverse consequences. |
|  Description | • This symbol indicates supplementary information for the main text. It is used to highlight key points, add operational details and explain critical concepts, helping users accurately understand the manual and perform operations efficiently. |

# Safety Precautions

## Safety Statement

- This chapter describes the safety precautions required for proper use of this product. Please read the manual and fully understand all safety information before using the product. Failure to comply with the safety precautions may result in death, serious personal injury or equipment damage.
- The "danger", "warning" and "caution" in the manual do not represent all safety precautions that should be observed and are only supplementary to all safety precautions.
- This product should be used in an environment that meets the requirements of the design specifications, otherwise it may cause failure. Functional abnormalities or component damage caused by failure to comply with relevant regulations are not within the scope of product quality assurance.

Our company will not bear any legal responsibility for personal safety accidents or property damages caused by failure to comply with the contents of this manual or illegal operation of products.

## Safety Precautions

- Product illustrations in this manual may be shown with the cover or safety cover removed for ease of detail. In actual use, be sure to reinstall the cover or cover as required and strictly follow the operating specifications in the instruction manual.
- The product illustrations attached to this manual are examples only. The actual product appearance or configuration may vary due to version or customization options. Please refer to the actual product you ordered.

## Unpacking Inspection

### ⚠ Caution

- If the product or accessories are found to have damage, rust, use marks and other problems, do not install them.
- Do not install if water is found inside the product, parts are missing or damaged.
- If the packing list does not match the product name, do not install it.
- Before unpacking, please check whether the outer package is intact, for damage, water damage, moisture or deformation, etc.
- Please unpack carefully in hierarchical order, and do not strike the package violently.
- When unpacking, check the surface of the equipment and accessories for damage, rust, scratches or impact damage.
- After unpacking, please check whether the equipment, accessories and technical data are complete one by one against the packing list.

## Storage and Transportation

### ⚠ Warning

- Please store and transport strictly in accordance with the storage and transportation conditions required by the product, otherwise there is a risk of damage to the product.
- Avoid storage and transportation in places such as water splash, rain, direct sunlight, strong electric field, strong magnetic field, strong vibration, etc.
- Avoid storing the product for more than 3 months. If the storage time is too long, please carry out tighter protection and necessary inspection.
- Please strictly package the products before transportation by vehicle. Closed boxes must be used for long-distance transportation.
- It is strictly prohibited to transport this product in mixed packages with equipment or items that may affect or damage this product.

## Installation

### Danger

Only those who have received professional training in electrical equipment and have relevant electrical knowledge can operate; Unauthorized operation by non-professionals is strictly prohibited.

### Warning

- Always read the product manual and safety precautions carefully before installation.
- Do not install this product in an environment with strong electric field or strong electromagnetic wave interference.
- Before installation, confirm that the mechanical strength of the installation location is sufficient to support the weight of the equipment; Otherwise, mechanical hazards may be triggered.
- Do not wear loose clothing or accessories during installation to avoid the risk of electric shock.
- If the product is installed in an enclosed environment (e.g. in a cabinet or chassis), it must be equipped with cooling devices (e.g. cooling fans or air conditioners) to ensure that the ambient temperature requirements are met; Otherwise, it may cause the equipment to overheat or even cause a fire.
- It is strictly prohibited to modify this product without authorization.
- It is strictly prohibited to loosen the fixing bolts of product parts and components, especially bolts marked with red marks.

### ⚠ Caution

- When products are installed in cabinets or terminal equipment, the cabinets or equipment must be provided with safety devices such as fire protection, electrical protection and mechanical protection, and their protection level shall comply with relevant IEC standards and local laws and regulations.
- If you need to install strong electromagnetic interference equipment such as transformer at the same time, please install shield protection device to prevent this product from malfunctioning.
- Please install the product on the surface of non-combustible materials such as metal; Avoid flammable materials from contacting or adhering to the surface of the product to prevent fire.
- When installing, please cover the top of the product with cloth or paper to prevent foreign matters such as metal chips, oil and water from drilling from entering the product and causing failure. After the operation is completed, please remove the cover in time to avoid blocking the ventilation hole and affecting the heat dissipation, causing the equipment to generate abnormal heat.
- When a machine originally operating at a constant speed is changed to a variable speed operation, a resonance phenomenon may occur. At this time, it is recommended to install anti-vibration rubber under the motor frame or enable the vibration suppression function to effectively reduce the influence of resonance.

## Wiring

### ⚠ Danger

- Professional only for equipment installation, wiring, maintenance, inspection or component replacement; Operation is strictly prohibited by non-professionals.
- Power must be cut off to all devices before wiring. After cutting off the power supply, there may still be residual voltage in the internal capacitor of the equipment. Please strictly observe the waiting time marked on the warning label of the product before wiring and other operations can be performed. Before operation, use a voltmeter to measure the DC voltage of the main circuit and confirm that it has dropped below the safe voltage; Otherwise, there is a risk of electric shock.
- When conducting wiring operations, removing the product cover or touching the circuit board, ensure that the equipment is in a power-off state; Live operation may result in serious electric shock accidents.
- Equipment and products must be reliably grounded; Poor grounding can significantly increase the risk of electric shock.

### ⚠ Warning

- It is strictly prohibited to connect the input power to the output of the device or product, otherwise it may cause damage to the device or even cause a fire.
- When connecting the driver to the motor, make sure that the phase sequence between the product and the motor terminals is exactly the same, otherwise it may cause the motor to rotate in the reverse direction.
- The cables used for wiring must meet the specified wire diameter and shielding requirements; If a shielded cable is used, the shielding layer shall be reliably grounded at one end.
- Please tighten the terminal screws strictly according to the tightening torque specified in the manual; Insufficient or excessive torque may lead to overheating and damage of the connection parts, which may lead to fire risk.
- After the wiring is completed, check carefully: make sure that all cables are connected correctly and that there are no leftover screws, spacers or bare cables inside the equipment, otherwise it may pose an electric shock hazard or damage to the equipment.

### ⚠ Warning

- Please strictly follow the operating specifications for electrostatic protection (ESD), and always wear an electrostatic bracelet before wiring to prevent electrostatic discharge from damaging the equipment or internal circuits of the product.
- Use twisted pair shielded cables when wiring the control circuit, and securely connect the shield to the grounding terminal of the product. Improper grounding may cause abnormal equipment operation.

### ⚠ Danger

- Before powering up, verify that the product is well installed, wired securely, and that the motor unit supports restart.
- Before powering on, please confirm that the power supply specifications meet the product requirements to prevent equipment damage or fire.
- It is strictly prohibited to open product cabinet doors or protective covers, touch any terminals or disassemble product components when electricity is on, otherwise it may lead to electric shock hazard.

### ⚠ Warning

- After the wiring operation and parameter setting is completed, please perform the machine trial operation to confirm that the equipment can operate safely; Otherwise, it may result in injury to persons or damage to equipment.
- Before powering on, please confirm that the rated voltage of the product is consistent with the actual power supply voltage; If the power supply voltage is set incorrectly, it may cause a fire.
- Before powering on, please ensure that there are no personnel around the products, motors and surrounding mechanical devices; Otherwise, people may be injured or even killed.

## Operation

### ⚠ Danger

- Non-professionals are strictly forbidden to operate this product, otherwise it may lead to serious personal injury or even death.
- When the equipment is in operation, it is strictly prohibited to touch any terminal, disassemble the equipment housing or any component, otherwise there is a risk of electric shock.

### ⚠ Warning

- Do not touch the equipment case, fan or resistor with your hands to test the temperature, so as to avoid scalding.
- While the equipment is running, make sure that no other items or metal objects fall into the interior of the equipment, which may cause fire or damage to the equipment.

## Maintenance

### ⚠ Danger

- Professional only for equipment installation, wiring, maintenance, inspection or component replacement; Operation is strictly prohibited by non-professionals.
- Maintenance operations are strictly prohibited when the equipment is powered on, otherwise there is a risk of electric shock.
- After cutting off the power supply of all equipment, please wait for at least the safety waiting time indicated on the product warning label before carrying out maintenance and other operations.
- When using PM motors, an induced voltage may be generated at the terminals of the motor before it completely stops rotating, even if the power supply to the device is turned off. Do not touch the motor terminals to avoid the risk of electric shock.

### ⚠ Caution

Please carry out regular daily inspection and regular maintenance work according to the equipment maintenance and maintenance specifications, and truthfully record the maintenance process and results.

## Repair

### Danger

- Installation, wiring, maintenance, maintenance, inspection or component replacement of equipment is strictly prohibited by non-professionals.
- It is strictly prohibited to carry out maintenance operations when the equipment is powered on, otherwise there is a risk of electric shock.
- After cutting off the power supply of all equipment, please wait for at least the safety waiting time indicated on the warning label before inspection, maintenance and other operations can be carried out.

### Warning

- Please submit the equipment repair request according to the product warranty agreement.
- When the fuse blows, the circuit breaker trips, or the leakage circuit breaker or ELCB trips, wait at least for the safety wait time indicated on the product warning label before reconnecting the power supply or operating the equipment; Failure to do so may result in injuries or damage to equipment.
- When the equipment fails or is damaged, it must be diagnosed and repaired by qualified professionals according to the maintenance manual, and the maintenance process and results must be completely recorded.
- Please strictly follow the Product Wear Parts Replacement Guide to perform the replacement operation.
- Do not continue to use damaged equipment, which may cause personal injury or cause further damage to the equipment.
- After replacing equipment components, be sure to re-check the wiring condition and complete the relevant parameter configuration.

## Scrapping

> **⚠ Caution**
>
> - Please scrap equipment and products according to relevant national regulations and standards to prevent property damage or personal injury.
> - Scrapped equipment and products shall be recycled and disposed of in accordance with industrial waste treatment standards to avoid pollution to the environment.

## Safety Labels

To ensure safe operation, please strictly observe the safety marks affixed on the equipment and do not damage or tear them off. The description of the safety identification is as follows:

| Safety Labels | Description |
| --- | --- |
|  | • Please carefully read the safety manual and operating instructions before using the product, otherwise there is a risk of injury or damage to the product.<br>• Do not touch the terminal section or remove the cover plate while powered on and for 10 minutes after the power is cut off, otherwise there is an electric shock hazard! |

# Preface

The EMP800 series is a new-generation high-performance intelligent motion controller independently developed by ESTUN for high-end equipment and intelligent manufacturing industries. Integrated with HSCM high-speed high-precision control technology and the FFTG full-function trajectory planning algorithm, and equipped with the self-developed TE motion instruction library, this product delivers superior expandability and industry-leading motion control performance. Powered by DataDrive AI Control technology, the EMP800 supports on-premise deployment and flexible cloud-edge-device networking to realize intelligent adaptive regulation, maintaining stable and reliable control performance throughout the full product lifecycle under all operating conditions. It fully satisfies sophisticated control requirements across high-end manufacturing sectors including precision machining, printing & packaging, semiconductors and new energy, delivering core control support for production lines to achieve high-speed high-precision operation, multi-axis synchronized motion and flexible manufacturing.

## Revision History

| Date | Version | Description |
|---|---|---|
| 2026.5 | V1.00 | New Manual |
| 2026.9 | V1.01 | update*Battery Maintenance*<br>update*Firmware Upgrade*<br>update*CAN Specifications* |

## Additional Documents

| Document Name | Brief Description |
|---|---|
| PLC Programming Software User Manual | Introduces the basic functions, quick start, network configuration, programming basics, and other related content of the PLC programming software. |
| Medium and Large PLC Instruction Manual (including Motion Control Section) | Introduces the basic instructions of medium and large PLCs, as well as motion control instructions, simulation, and debugging-related operations. |
| EMP800 Series Programmable Logic Controller User Manual | Introduces product information, product installation, cable connection, power-up and power-down procedures, maintenance, and other related content. |

## Data acquisition

This manual is not shipped with the product. To obtain the PDF version, please follow these ways: visit ESTUN's official website (*https://www.estun.com/*), "**Service & Support -> Resource download** " , search by keyword and download the manual.

# Table of Contents

Statement..... 2
Symbol Conventions..... 3
Safety Precautions..... 4
Preface..... 13
List of Figures..... 16
List of Tables..... 17
1 Product Information..... 18
1.1 Model and Nameplate Description..... 18
1.2 Component Description..... 19
1.3 LCD Screen Description..... 20
1.4 LED Indicator Light..... 22
1.5 Technical Specifications..... 22
1.5.1 Basic Specifications..... 22
1.5.2 Power Specifications..... 23
1.5.3 Ethernet Specifications..... 23
1.5.4 OPC UA Specifications..... 24
1.5.5 RS485 Specifications..... 24
1.5.6 CAN Specifications..... 24
1.5.7 EtherCAT Specifications..... 25
1.5.8 USB Specifications..... 26
1.5.9 Type-C Specifications..... 26
1.5.10 HDMI Specifications..... 26
1.5.11 TF Card Specifications..... 27
1.5.12 SIM Card Specifications..... 27
2 Product Installation..... 28
2.1 Preparation Before Installation..... 28
2.1.1 Installation Environment Requirements..... 28
2.1.2 Installation Position Requirements..... 28
2.1.3 Product and Tool Preparation..... 30
2.1.4 Installation Dimensions Overview..... 30
2.2 Installation Precautions..... 32
2.3 Installation Operation..... 32
2.4 Check after Installation..... 34
3 Cable Connection..... 35
3.1 Wiring Requirements..... 35

3.1.1 Grounding Requirements..... 35
3.1.2 Routing Requirements..... 35
3.1.3 Power Filter Requirements (Optional)..... 36
3.2 Cable Preparation..... 37
3.3 Power Cable Connection..... 39
3.4 Network Cable Connection..... 40
3.5 CAN Communication Cable Connection..... 42
3.6 RS485 Communication Cable Connection..... 44
3.7 Digital Input/Output Interface..... 46
4 Power-up and Power-down..... 49
4.1 Power-up..... 49
4.2 Power-down..... 49
5 Programming and Commissioning..... 51
6 Maintenance..... 52
6.1 Routine Maintenance..... 52
6.2 Host or Module Maintenance..... 53
6.3 Battery Maintenance..... 54
6.4 Terminal Maintenance..... 56
6.5 Firmware Upgrade..... 57
Appendix A PLC-Related Function Fault Codes..... 62

# List of Figures

Figure 2-1 Correct Installation Position..... 29
Figure 2-2 Incorrect Installation Position..... 29
Figure 2-3 Minimum Clearance..... 30
Figure 2-4 Host Dimensions..... 31
Figure 2-5 Host and Cable Dimensions..... 31
Figure 2-6 DIN Guide Rail Dimensions..... 32
Figure 2-7 Host Installation..... 33
Figure 2-8 Guide Rail Clamp Installation..... 34
Figure 2-9 Check after Installation..... 34
Figure 3-1 Shielded Cable Grounding Requirements..... 35
Figure 3-2 Cable Routing Requirements for Each Cable Category..... 36
Figure 3-3 Power Interface Diagram..... 40
Figure 3-4 Ethernet Port Schematic Diagram..... 41
Figure 3-5 Ethernet Interface RJ-45..... 41
Figure 3-6 Ethernet Requirements..... 42
Figure 3-7 CAN Interface Diagram..... 43
Figure 3-8 CAN Wiring Diagram..... 43
Figure 3-9 CAN Wiring Diagram..... 44
Figure 3-10 RS485 Interface Diagram..... 44
Figure 3-11 RS485 Wiring Diagram..... 45
Figure 3-12 RS485 Wiring Diagram..... 45
Figure 3-13 DI/DO Wiring Diagram..... 46
Figure 3-14 Digital Input Wiring Circuit Diagram..... 47
Figure 3-15 Digital Output Interface Circuit Diagram..... 48
Figure 6-1 Host or Module Disassembly..... 54
Figure 6-2 Remove the Old Battery..... 55
Figure 6-3 Install the New Battery..... 56

# List of Tables

Table 1-1 Model Description....18
Table 3-1 Power Interface Connector Signal Definition....40
Table 3-2 Power Input Specifications....40
Table 3-3 RJ-45 Interface Pin Definition....41
Table 3-4 Ethernet factory default IP address....41
Table 3-5 CAN Interface Pin Definition....43
Table 3-6 RS485 Interface Pin Definition....44
Table 3-7 Digital Input/Output Terminal Definition....46
Table 3-8 DI Digital Input Function Table....47
Table 3-9 DO Digital Output Function Table....48

# 1 Product Information

## 1.1 Model and Nameplate Description

Table 1-1 Model Description

| EMP | 8 | 0 | 5 | - | 0808 |
|---|---|---|---|---|---|
| ① | ② | ③ | ④ | | ⑤ |

| ① Product family: |
|---|
| EMP: EMP Series Programmable Logic Controller |

| ② Product series number: | ③ Hardware architecture: | ④ Number of axes: | ⑤ Number of input and output points: |
|---|---|---|---|
| 8: 800 series | 0: Default | 5: 32-axis<br>6: 64-axis<br>7: 128-axis<br>8: 256-axis | 08: 8-point input<br>08: 8-point output |

**Nameplate Description**

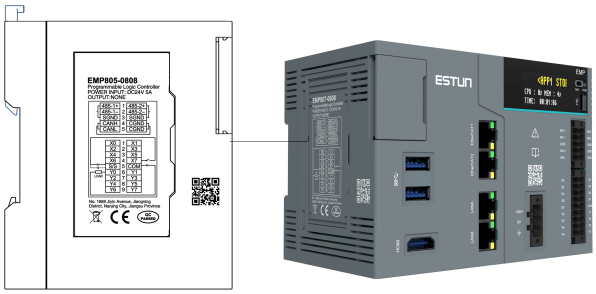


| Model | Description |
|---|---|
| EMP805-0808 | Programmable Logic Controller - EMP800 Series Universal 32-Axis Motion Controller |
| EMP806-0808 | Programmable Logic Controller - EMP800 Series Universal 64-Axis Motion Controller |
| EMP807-0808 | Programmable Logic Controller - EMP800 Series Universal 128-Axis Motion Controller |
| EMP808-0808* | Programmable Logic Controller - EMP800 Series Universal 256-Axis Motion Controller |

**Note**

"*" indicates products in development.

## 1.2 Component Description

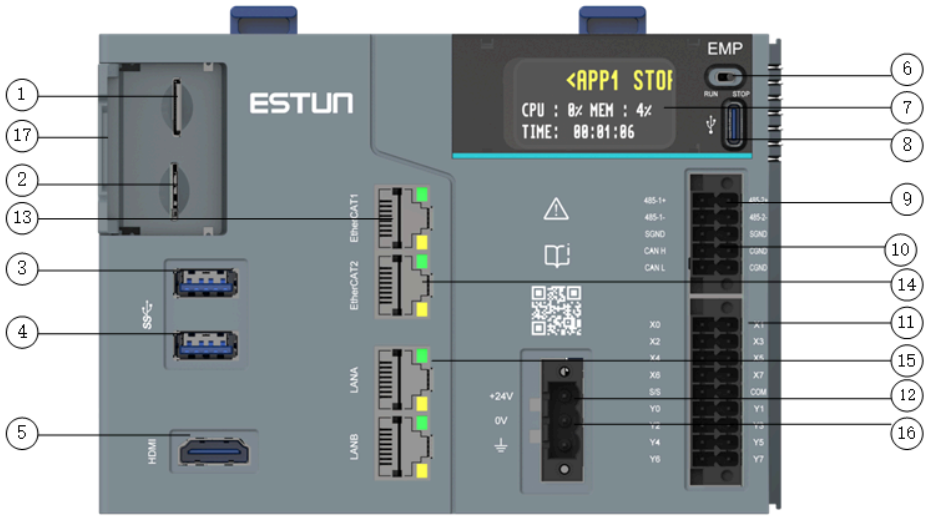


| No. | Component Name | Component Identification | Component Description |
|---|---|---|---|
| 1 | TF card slot | TF | Firmware Upgrade |
| 2 | SIM card slot | SIM | For wireless module application (reserved) |
| 3 | USB3.0 | SS | Firmware upgrade, external keyboard/mouse access |
| 4 | | | |
| 5 | HDMI | HDMI | HDMI display port |
| 6 | DIP switch | RUN/STOP | Control run/stop of main unit |
| 7 | LCD screen | - | Display the overall running status. For detailed description, please refer to *LCD Screen Description* |
| 8 | Type-C port | | Firmware Upgrade |
| 9 | RS485 interface | 485-1+ | Channel 1 RS485 signal positive |
| | | 485-1- | Channel 1 RS485 signal negative |
| | | 485-2+ | Channel 2 RS485 signal positive |
| | | 485-2- | Channel 2 RS485 signal negative |
| | | SGND | RS485 reference ground (two SGND pins internally connected) |
| 10 | CAN interface | CANH | CAN signal H |
| | | CANL | CAN signal L |
| | | CGND | CAN reference ground (two CGND pins internally connected) |

| No. | Component Name | Component Identification | Component Description |
|---|---|---|---|
| 11 | DI/DO | - | DI/DO Interface, please refer to *Digital Input/Output Interface* for definition |
| 12 | 24V Power Supply | +24V | Positive terminal of 24VDC power input |
| | | 0V | Negative terminal of 24VDC power input |
| | |  | Main unit functional ground |
| 13 | EtherCAT1 | EtherCAT1 | Auto-adaptive for 10/100/1000 Mbit/s<br>Please refer to *LED Indicator Light* for the status and definition of the indicator light |
| 14 | EtherCAT2 | EtherCAT2 | Auto-adaptive for 10/100 Mbit/s<br>Please refer to *LED Indicator Light* for the status and definition of the indicator light |
| 15 | LANA/LANB | LANA/LANB | 2 Ethernet interfaces, auto-adaptive for 10/100/1000 Mbit/s<br>Please refer to *LED Indicator Light* for the status and definition of the indicator light |
| 16 | | | |
| 17 | Battery compartment | - | Open the cover of the battery compartment to replace the button battery. For detailed replacement steps, please refer to *Battery Maintenance* |

## 1.3 LCD Screen Description

After PLC powers on and enters startup phase, it sequentially displays manufacturer information interface, network information interface and operation status interface; the interface switches to fault interface once an error occurs.

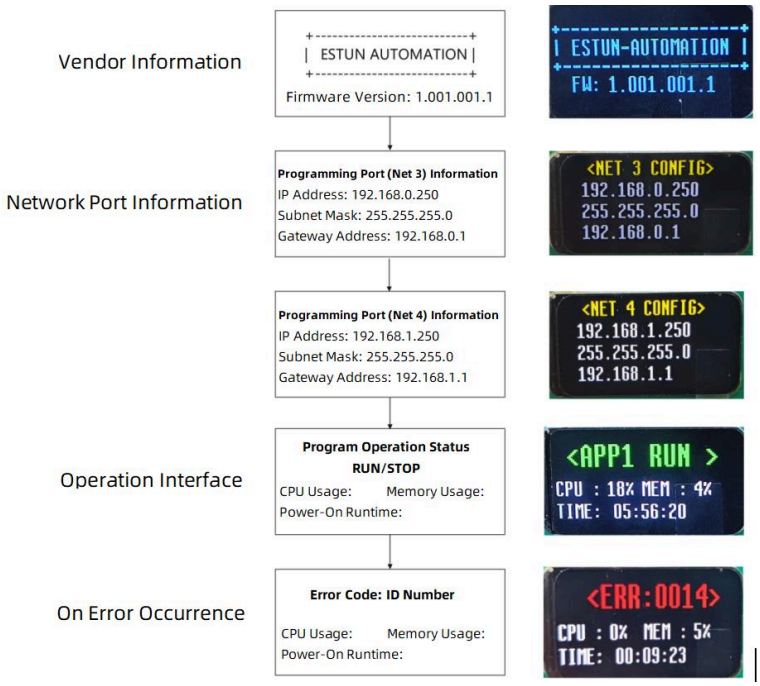


| Interface Name | Details |
|---|---|
| Manufacturer information interface | Upon PLC power-up, the manufacturer information interface appears first to display brand logo and firmware version |
| Network port information interface | The network port information interface displays the IP address, subnet mask, and gateway address of the programming ports (network port 3 / network port 4). Based on this information, users can connect to the corresponding network port to perform operations such as PLC configuration and program download. |
| Running status interface | After the network port information interface, the main operation interface is displayed. This interface is the default screen where the PLC running duration is shown. It supports scrolling to display the running status of multiple applications, while also showing system resource usage and running duration information:<br>• Application running status: When multiple APPs exist, the status of different APPs will be displayed in a scrolling manner, for example, APP1 RUN / APP2 STOP;<br>• CPU usage: Displays real-time CPU utilization;<br>• Memory usage: Displays real-time memory utilization;<br>• Uptime: Accumulates running duration after power-on. |
| Error interface | When an exception occurs during device running, the interface will jump to the error interface, displaying the error ID and current system status information. The error ID will continue to be displayed until the program returns to normal operation: |

| Interface Name | Details |
| --- | --- |
| | • Error ID: Refer to *PLC-Related Function Fault Codes* for troubleshooting, for example, <ERR:20> - Invalid handle error;<br>• CPU usage: Displays real-time CPU utilization;<br>• Memory usage: Displays real-time memory utilization;<br>• Uptime: Accumulates running duration after power-on. |

## 1.4 LED Indicator Light

The EtherNET port and EtherCAT interface have the same indicator light meanings. Please refer to the table below for details.

| Indicator Light Name | Function | Status and Meaning |
| --- | --- | --- |
| Green indicator light | Link | Lit: 10/100/1000 Mbit/s connected<br>Off: No connection |
| Orange indicator light | Act | Flashing: Connected with data transmission and reception<br>Off: No connection |

## 1.5 Technical Specifications

### 1.5.1 Basic Specifications

| Item | Specification |
| --- | --- |
| CPU model | ARM, 8-core high-performance CPU |
| Memory capacity | 4GB |
| EMMC capacity | 8GB |
| Programming mode | IEC61131-3 programming language |
| Operating system | Linux Preempt-R |
| Program execution mode | Compilation and execution |
| User program storage | 128MB |
| User data storage capacity | 128MB |
| Built-in power-down retention capacitor charging time | 4 min |
| Power-down retention time | 5 s |
| Power-down retention memory size | 5 MB, with built-in power-down retention function, no external UPS required |
| EtherCAT communication | Channel 2 (max. 128 slaves per channel; connectable by max. 256 slaves for channel 2) |

| Item | Specification |
|---|---|
| ModbusTCP communication | Channel 2 (as master: max. 63 slaves; as slave: connectable by max. 16 masters) |
| ModbusRTU communication | As master: max. 31 slaves per channel; as slave: connectable by max. 1 master |
| Maximum clock deviation | 2 s/day (ambient temperature) |
| Battery | CR1220 coin cell (3 V, capacity ≥ 210 mAh, operating temperature: –30 ℃ ~ +60 ℃) |
| Cooling method | Natural cooling with internal heat sink |
| Expansion module | Supports max. 32 ES80-XX series local expansion modules (a relay power module is required when more than 16 local expansion modules are installed) |
| Programming language | ST, LD, FBD, SFC, IL |
| IP Rating | IP20 |
| Dimensions (W × H × D) | 142mm × 100mm × 85mm |
| Weight | ≤0.95 kg |
| Power consumption | 13 W (excluding expansion IO modules) |

## 1.5.2 Power Specifications

| Item | Specification |
|---|---|
| Rated terminal input voltage | 24 VDC (-20% ~ +20%), non-isolated |
| Rated terminal input current | Max. 5 A, typical 3 A; supply for main unit and local expansion modules |
| Rated bus output voltage | 5.2 VDC (4.75 VDC ~ 5.5 VDC) |
| Rated bus output current | 3 A (max. at 5.2 V) |
| 24 V input power protection | Short-circuit protection and reverse polarity protection supported |
| Hot-swap function for IO modules | Support |

## 1.5.3 Ethernet Specifications

| Item | Specification |
|---|---|
| Channel | 2 channels |
| Network medium | Cat5e cable, refer to *Cable Preparation* for details |
| Duplex mode | Full duplex |
| Network interface | RJ45 (with metal housing and LED) |
| Baud rate | 10/100/1000 Mbit/s |
| Communication distance | ≤ 100m |

### 1.5.4 OPC UA Specifications

| Item | Specification |
|---|---|
| Security policy | - |
| User authentication | Anonymous |
| Server port | 4840 |
| Session timeout (s) | 5 ~ 60,000, default 30 |
| Sampling interval (ms) | 100/300/500/1000/2500/5000; default 100 |
| Minimum publish interval | 200~20,000,000, default 1000 |
| Maximum number of sessions | 50 |
| Maximum server subscriptions | 200 |
| Maximum monitored nodes of server | 20,000 |
| Maximum subscriptions per session | 50 |
| Maximum monitored nodes per subscription | 10,000 |
| Maximum nodes per single reading and writing frame | 1000 |

### 1.5.5 RS485 Specifications

| Item | Specification |
|---|---|
| Channel | Main unit: 2 channels |
| Isolation method | Digital isolator isolation |
| Terminating resistor | Available (configurable via software) |
| Master/Slave | Supported as master/slave |
| Number of slaves | Max. 31 slaves (the length of each slave branch shall be less than 3 m) |
| Protocol | Supports Modbus RTU and free protocols |
| Communication rate | 4.8, 9.6, 19.2, 38.4, 57.6, 115.2 kbit/s<br>Default 9.6 kbit/s |

### 1.5.6 CAN Specifications

| Item | Specification |
|---|---|
| Channel | Main unit: 1 channel |
| Isolation method | Digital isolator isolation |
| Terminating resistor | Available (configurable via software) |

| Item | Specification |
|---|---|
| Master/Slave | Only supported as master |
| Number of slaves | Supports max. 8 slaves |
| Protocol | Support CAN free protocol |
| Communication rate | 10, 20, 50, 100, 125, 250, 500, 800, 1000 kbit/s<br>Default 500 kbit/s |

### 1.5.7 EtherCAT Specifications

| Item | Specification |
|---|---|
| Channel | 2 channels |
| Communication protocol | EtherCAT protocol |
| Supported service | FoE, CoE (PDO, SDO) |
| Minimum synchronization cycle | 500μs: 32 axes (max. 32 axes supported)<br>1ms: 64 axes (max. 64 axes supported)<br>2ms: 128 axes (max. 128 axes supported)<br>4ms: 256 axes (max. 256 axes supported) |
| Maximum jitter of EtherCAT task | ±50μs |
| Maximum synchronization jitter between EtherCAT slaves | 1μs |
| Maximum number of axes | EMP805-0808: 32 axes<br>EMP806-0808: 64 axes<br>EMP807-0808: 128 axes<br>EMP808-0808: 256 axes* (under development) |
| Synchronization mode | DC distributed clock for servo; IO sync via input and output |
| Physical layer | 100BASE-TX |
| Baud rate | 100 Mbit/s (100Base-TX) |
| Duplex mode | Full duplex |
| Topology | Ring, line |
| Transmission medium | Cat5e cable, refer to *Cable Preparation* for details |
| Transmission distance | Less than 100 m between two nodes |
| Number of slaves | Max. 256 (max. 128 slaves supported per EtherCAT channel) |
| EtherCAT frame length | 44 ~ 1498 bytes |
| Process Data | Max.1486 bytes per Ethernet frame |
| Ring network function | Support |
| Auto-scan function | Support |

### 1.5.8 USB Specifications

| Item | Specification |
|---|---|
| Channel | 2-channel USB3.0 |
| Communication rate | USB3.0: max. 5.0 Gbit/s |
| 5 V output current | Max. 1 A per channel (no current limit) |
| Communication distance | USB3.0: max. 1 m<br>USB2.0: max. 3 m |
| Isolation | No |
| USB short-circuit protection | Yes |
| USB communication version | USB3.0 |
| USB hardware interface | USB3.0: type A |
| Host/Device | Host |
| Power supply | USB3.0: 5 V/1 A |

### 1.5.9 Type-C Specifications

| Item | Specification |
|---|---|
| Channel | 1-channel Type-C interface |
| USB cable length | 3 m |
| USB communication version | USB2.0 |
| Hardware interface | Standard Type-C socket |
| Host/Device | Device |
| Power supply | No |

### 1.5.10 HDMI Specifications

| Item | Specification |
|---|---|
| Channel | Channel 1 HDMI interface |
| HDMI cable length | 3 m |
| HDMI communication version | HDMI2.1 |
| Hardware interface | Standard HDMI socket |
| Power supply | Yes, max. output current ≤ 50 mA |
| Resolution | Max. supported 1920 × 1080 |

### 1.5.11 TF Card Specifications

| Item | Specification |
| --- | --- |
| Channel | Channel 1 TF card interface |
| Capacity | Max. supported 32GB |

### 1.5.12 SIM Card Specifications

| Item | Specification |
| --- | --- |
| Channel | Channel 1 SIM card interface |
| Hardware interface | Micro SIM card interface |

# 2 Product Installation

## 2.1 Preparation Before Installation

### 2.1.1 Installation Environment Requirements

Install the PLC on the guide rail with full consideration of operability, maintainability and environmental resistance.

| Item | Specification |
|---|---|
| Operating environment | Free of conductive dust, conductive fibers, explosive dust and flammable gas; free of water mist, oil contamination, corrosive dust and corrosive gas; no severe vibration and repetitive shock. |
| Altitude | ≤2000m |
| Pollution degree | Class 2 |
| Immunity | 4 kV on power supply lines (IEC 61000-4-4) |
| Overvoltage category | I |
| Overcurrent protection device | 4 A fuse |
| EMC immunity class | Zone B, IEC61131-2 |
| Vibration resistance | • Operating condition: Tested in accordance with IEC 60068-2-6; amplitude is 3.5 mm from 5 Hz to 8.4 Hz, acceleration is 1 g from 8.4 Hz to 200 Hz; 10 cycles per axis.<br>• Transportation condition: Tested in accordance with IEC 60068-2-64; power spectral density is 0.01 $g^2$/Hz within 5 Hz~100 Hz and 0.001 $g^2$/Hz at 200 Hz, with Grms of 1.14 g. |
| Shock resistance | For operating and transportation applications, tested per IEC 60068-2-27; peak acceleration 15 g, pulse width 11 ms, total 18 shocks over three orthogonal axes. |
| Operating temperature/humidity | • Temperature: -20℃ ~ +60℃<br>• Humidity: 10% RH ~95% RH, no condensation |
| Storage temperature/humidity | • Temperature: -40℃ ~ +80℃<br>• Humidity: 10% RH ~95% RH, no condensation |

### 2.1.2 Installation Position Requirements

This product supports horizontal mounting only, as shown in the figure below.

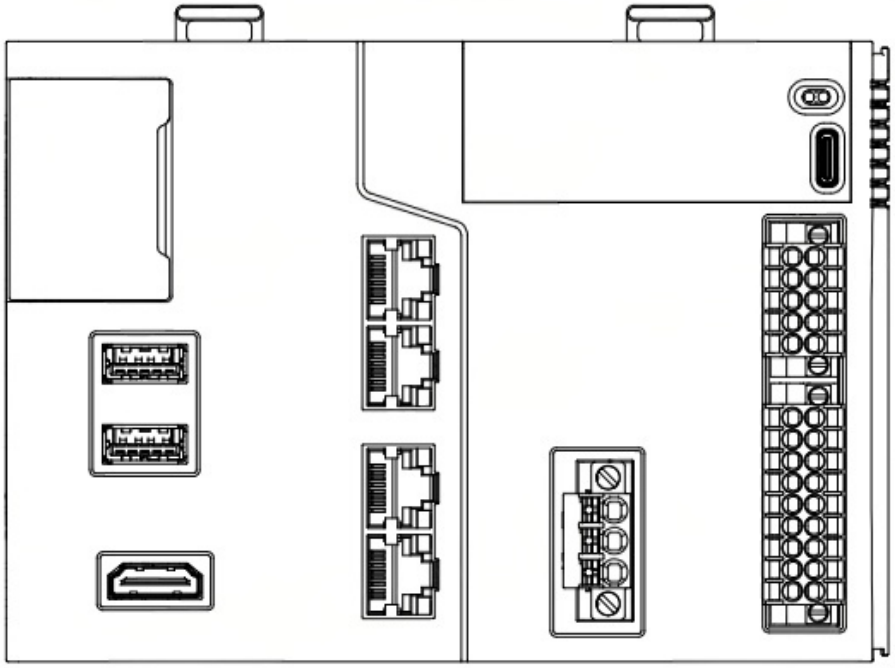

Figure 2-1 Correct Installation Position

All other mounting orientations are incorrect, as shown in the figure below.

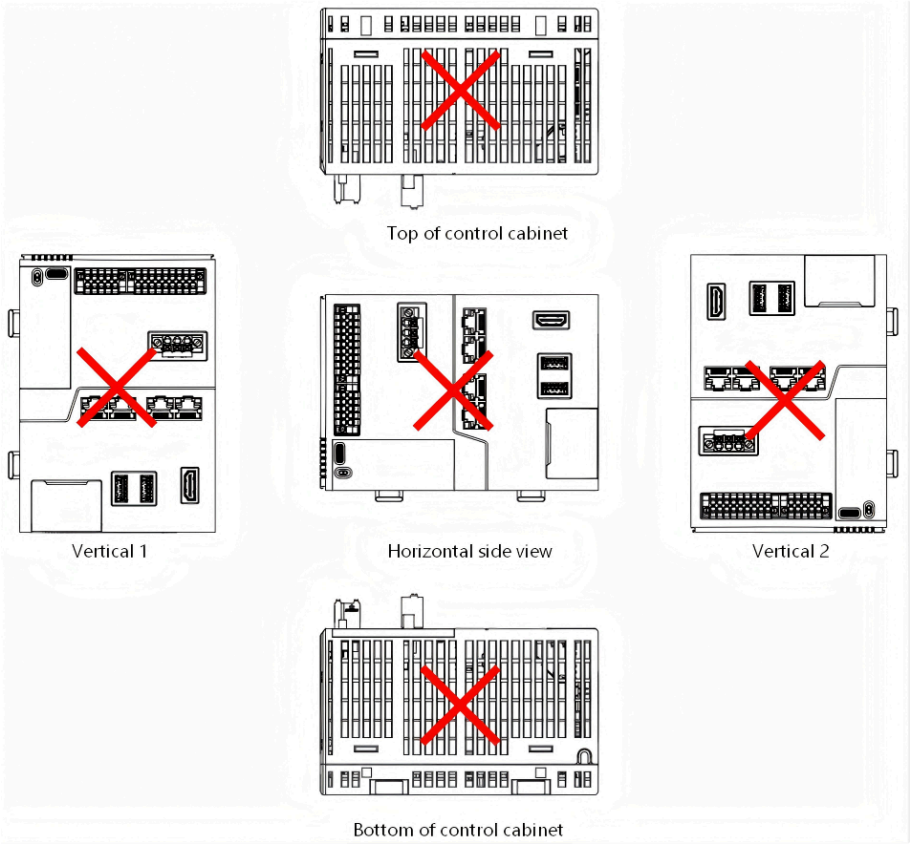


Figure 2-2 Incorrect Installation Position

This product adopts natural convection for heat dissipation. To ensure proper ventilation, heat dissipation and sufficient wiring space, a minimum clearance A (A > 50 mm) must be reserved around the unit, as shown in the figure below.

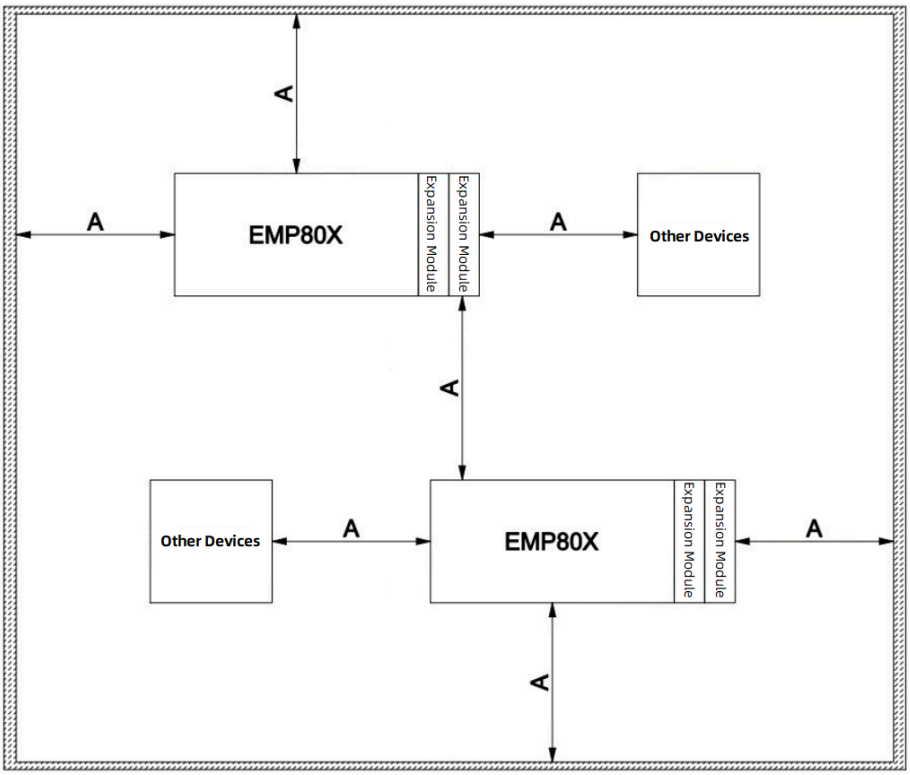


Figure 2-3 Minimum Clearance

## 2.1.3 Product and Tool Preparation

Verify all required products and tools are available before installation.

| Item | Description |
|---|---|
| EMP800 host | Minimum 1 unit |
| Standard DIN rail | Minimum 1 set of IEC 60715 compliant DIN rail (user-supplied) |
| Guide rail clamp | Minimum 1 pair (user-supplied) |
| Screw | Standard DIN rail mounting screws (M5, user-supplied) |
| Screwdriver | One flathead screwdriver (ϕ2.5 mm) and one Phillips screwdriver (ϕ5 mm) |

## 2.1.4 Installation Dimensions Overview

**Host**

The dimension details of the host are shown in the figure below; unit: mm.

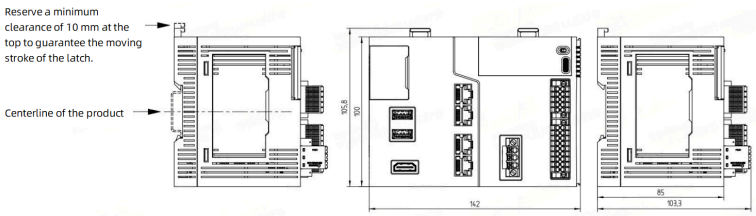


Figure 2-4 Host Dimensions

**Host and Cable**

Dimensions of the host and cable are shown below; unit: mm.

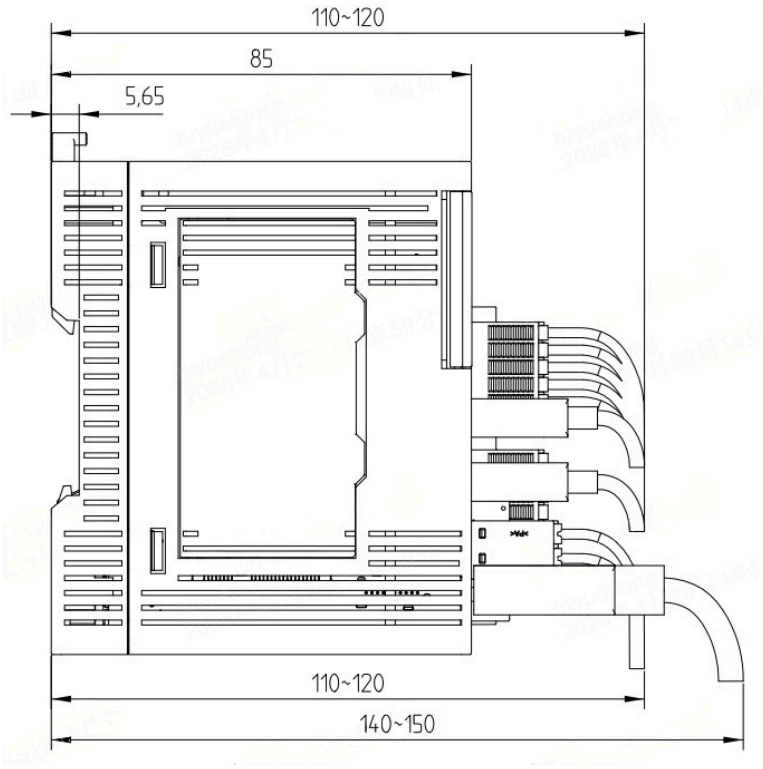


Figure 2-5 Host and Cable Dimensions

**DIN Guide Rail**

The DIN guide rail shall comply with IEC 60715 (35 mm width, 1 mm thickness), dimensions shown below; unit: mm.

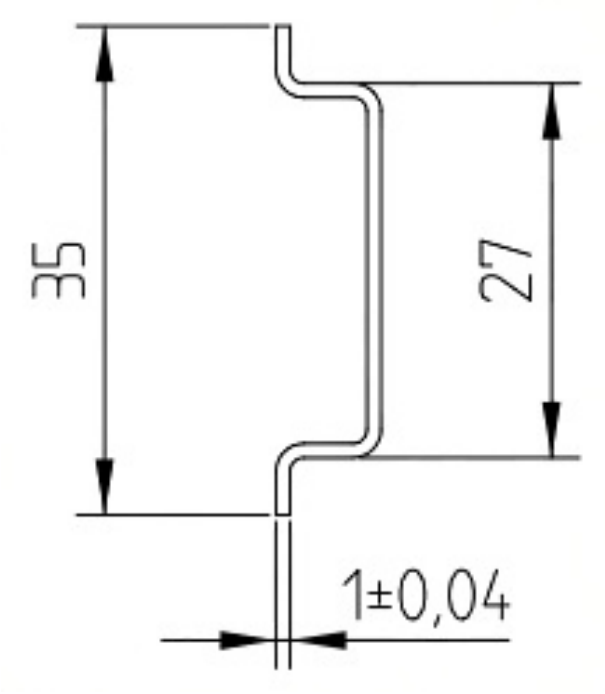


Figure 2-6 DIN Guide Rail Dimensions

## 2.2 Installation Precautions

- Ensure the product is powered off before installation
- Prevent the housing, terminal block and connector from dropping or being impacted to avoid product damage
- Do not disassemble this product or it may be damaged
- Do not fasten the product with excessive torque to prevent damage to the product and terminals

## 2.3 Installation Operation

1. Install the host.
   Pull out the two locking clips on the upper part of the host unit prior to installation. Tilt the host slightly to hook the lower fixed locking clip onto the guide rail. Rotate the host in the arrow direction to align with the rail, and press the two movable locking clips to secure them onto the rail, as shown in the figure below.

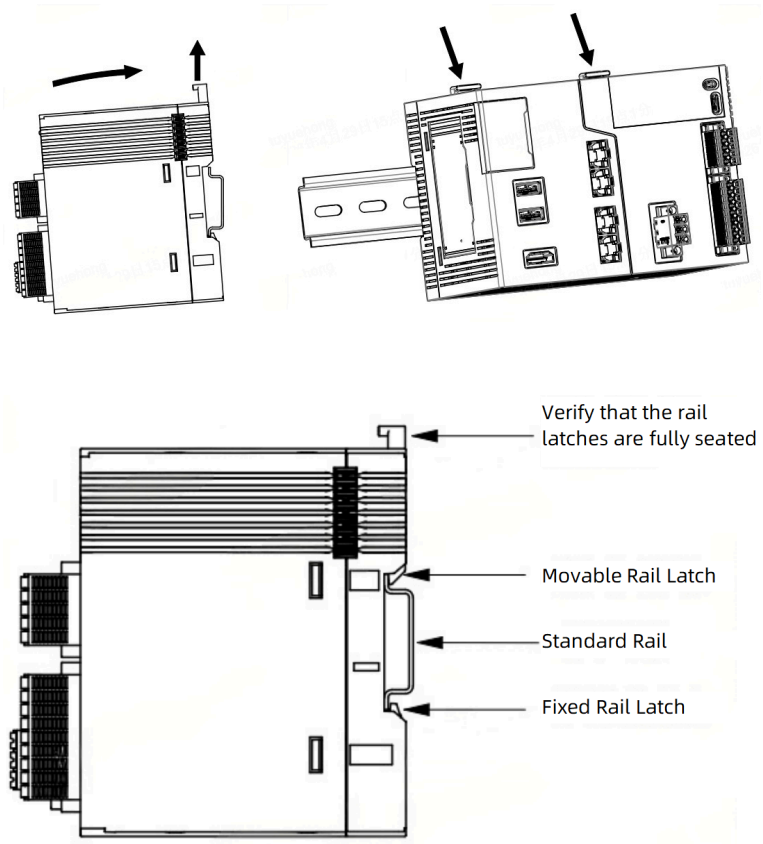


Figure 2-7 Host Installation

**Note**

Upon completion of installation, the locking clips will automatically spring back to fasten the rail. If the clips do not rebound, manually press down the top of the clips to ensure proper installation.

2. Install the guide rail clamp.
   Install one guide rail clamp at each end. Hook the bottom of the guide rail clamp onto the bottom of the guide rail, rotate the clamp to hook its upper end

onto the top of the guide rail, then tighten the screws to secure the guide rail clamp, as shown in the figure below.

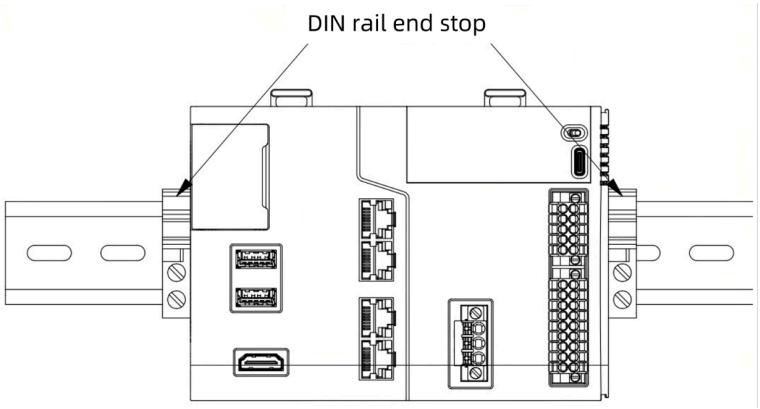


Figure 2-8 Guide Rail Clamp Installation

## 2.4 Check after Installation

1. Verify the guide rail locking clips are fully pressed into place.
2. Check the guide rail clamps on both sides are securely fastened.
3. Confirm terminal screws are fully tightened.

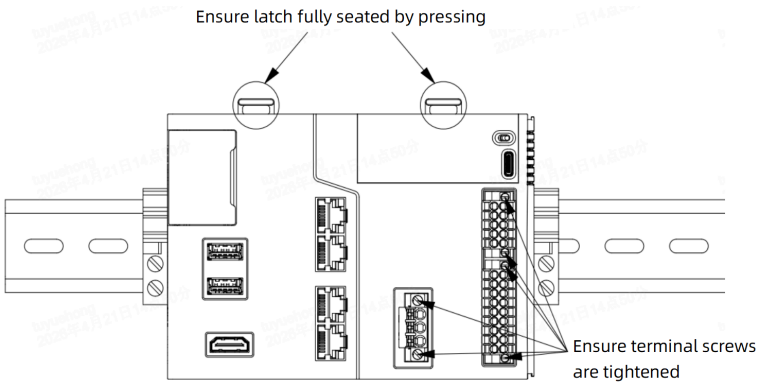


Figure 2-9 Check after Installation

# 3 Cable Connection

## 3.1 Wiring Requirements

### 3.1.1 Grounding Requirements

**PLC Unit Grounding**

A grounding point is available at the PLC power terminal. Use a thick and short ground wire (length less than 30 cm) to ground the entire PLC unit whenever possible.

**Shielded Cable Grounding**

All communication signal cables must be shielded and grounded as close to the module as possible to eliminate electromagnetic induction interference from ungrounded cable segments. Once the outer sheath is partially stripped, arrange the exposed shield to contact the grounding point over a large area and secure reliable electrical contact.

Meanwhile, avoid soldering PVC wires onto the shield for grounding via the cable front end, because this connection increases high-frequency impedance and compromises shielding performance. Correspondingly, all shielded communication cables shall be grounded at both ends.

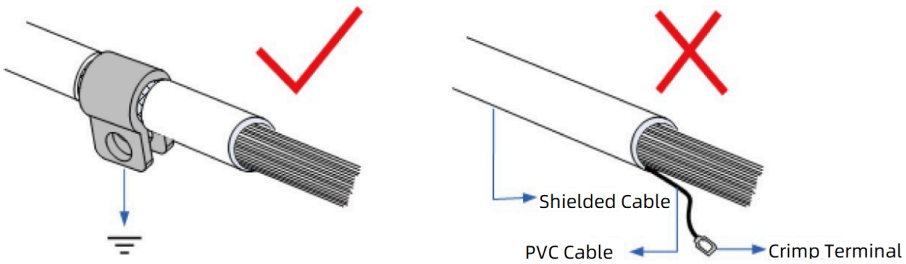


Figure 3-1 Shielded Cable Grounding Requirements

### 3.1.2 Routing Requirements

Low-voltage cables (<1 kV) are generally classified into four categories. Cables of the same category can be bundled together, while cables from different categories shall be routed separately without crossing or overlapping under normal conditions. If crossing cannot be avoided, the right-angle crossing should be adopted.

| No. | Type | Application Object |
|---|---|---|
| 1 | Category 1 | Ethernet and EtherCAT port cables |

| No. | Type | Application Object |
|---|---|---|
| 2 | Category 2 | Low-speed digital communication signals (RS232, RS485) and digital IO signals |
| 3 | Category 3 | Low-voltage AC distribution cables and DC power cables (e.g., 24 V DC output cables from switching power supplies) |
| 4 | Category 4 | Input and output cables, welding machine cables, power converter power cables |

A certain distance must be maintained between different types of cables. For cables with a length of less than 30 m, the minimum allowable spacing is shown in the figure below.

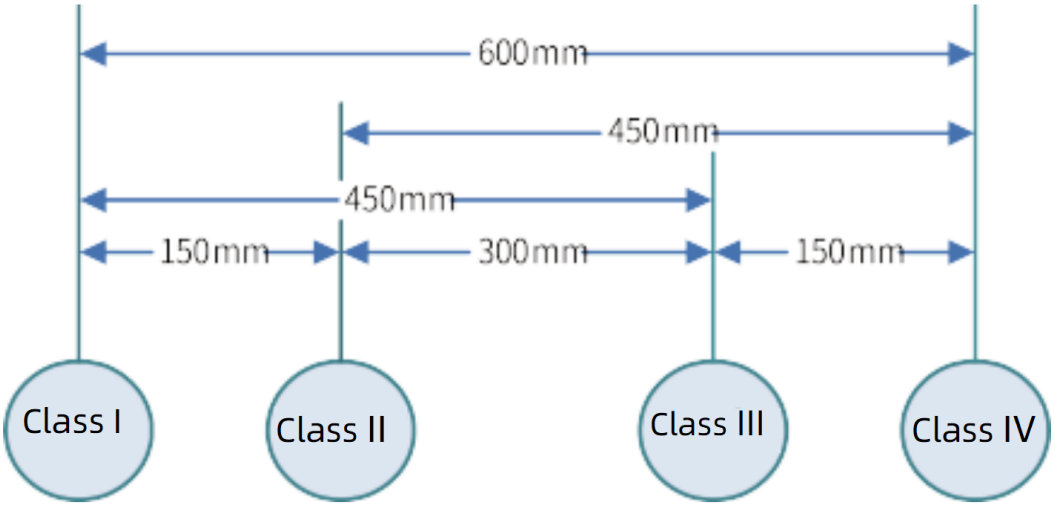


Figure 3-2 Cable Routing Requirements for Each Cable Category

**Note**

- When the parallel routing length of the cables increases, the spacing shall be increased accordingly.
- In addition to maintaining spacing, shielding can also be achieved by installing multiple shielding plates placed together between different types of cables. To reduce cross-interference, all cables should be routed as close as possible to structural components that are connected to the cabinet ground (grounded), such as the cabinet mounting plate or rack components.

### 3.1.3 Power Filter Requirements (Optional)

When the PLC is used on industrial sites with strong interference sources such as inverters, an additional noise filter is recommended to effectively suppress interference noise.

Install the filter as close as possible to the PLC power supply, and connect it reliably to the conductive backplate via screws. Coat the screw fastening area for protection during installation to guarantee good filter earthing. To avoid noise coupling, route the input cables from the power supply to the filter separately from the output cables running from the filter to the PLC, preventing unfiltered noise from coupling directly onto filtered cables.

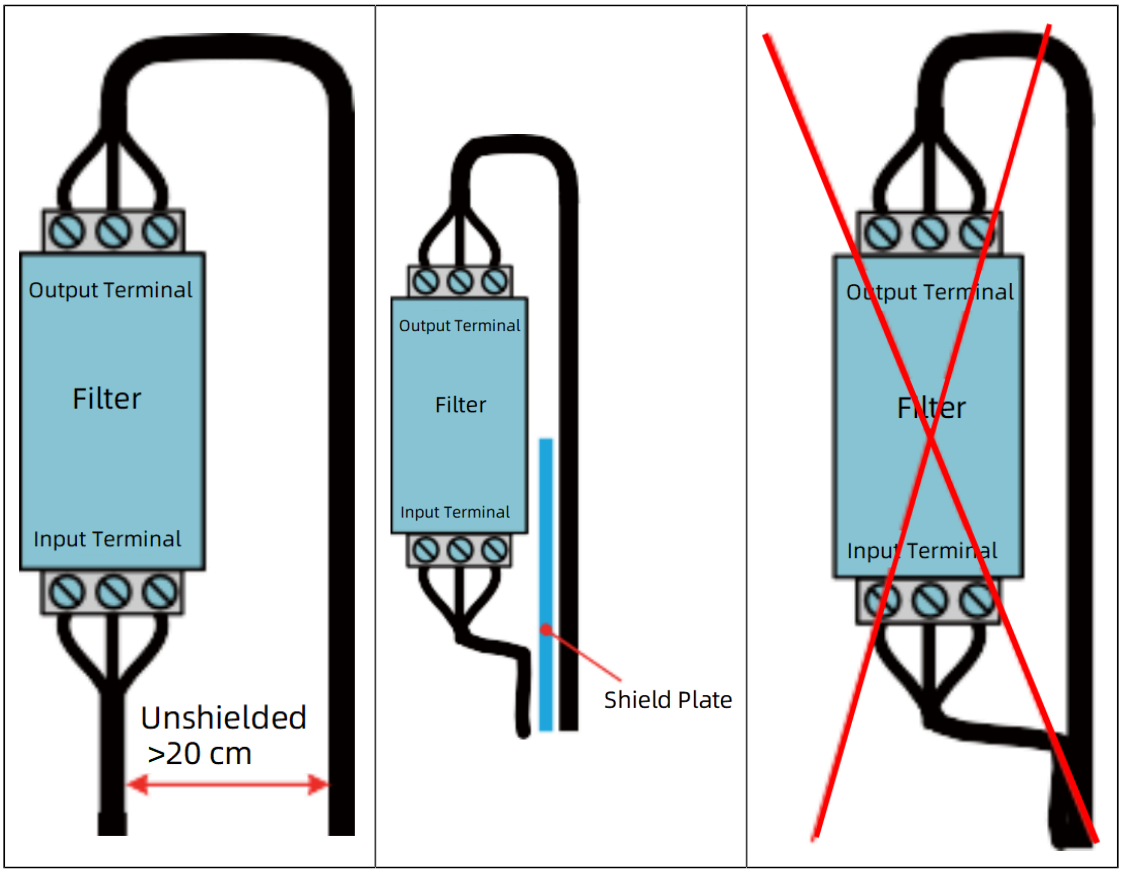


## 3.2 Cable Preparation

**Power Cable/Communication Cable**

Please refer to the table below for the specifications of power cables and communication cables. The wire ferrule diameter is for reference only; reasonable calculations may be performed based on actual use and adjustments may be made accordingly.

| Material Name | Applicable Wire Size | | Stripping Length | Model | Crimping Tool |
|---|---|---|---|---|---|
| | China Standard ($mm^2$) | US Standard (AWG) | | | |
| Tubular ferrule | 0.5 | 22 | 10mm~ 11mm | ENY0510 | CRIMPF0X6 |

| Material Name | Applicable Wire Size | | Stripping Length | Model | Crimping Tool |
|---|---|---|---|---|---|
| | China Standard ($mm^2$) | US Standard (AWG) | | | |
| | 0.75 | 20 | 10mm~11mm | ENY7510 | |
| | 1.0 | 18 | 10mm~11mm | ENY1010 | |

**Network Cable**

EtherNET and EtherCAT communications have strict cable requirements. Cat5e or higher-grade shielded Ethernet cables shall be adopted, as specified below:

- Cable requirements

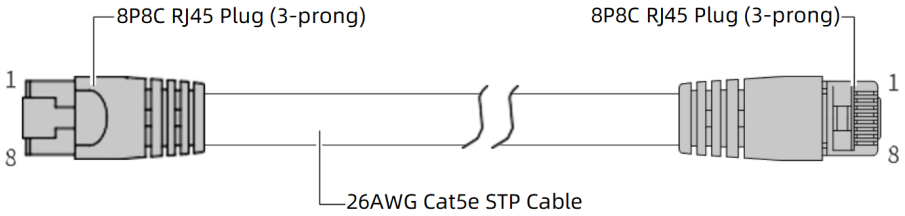


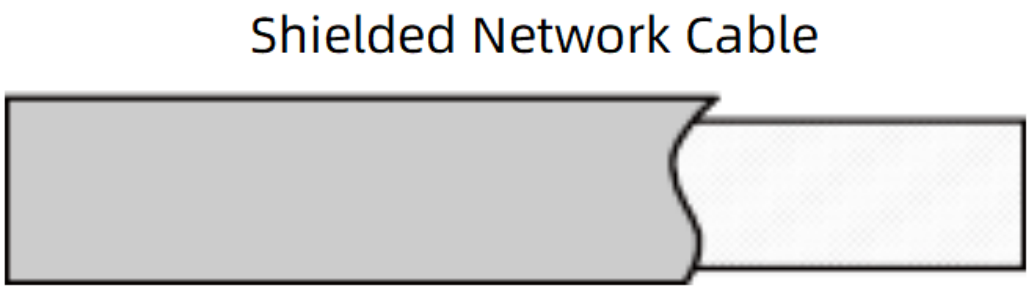


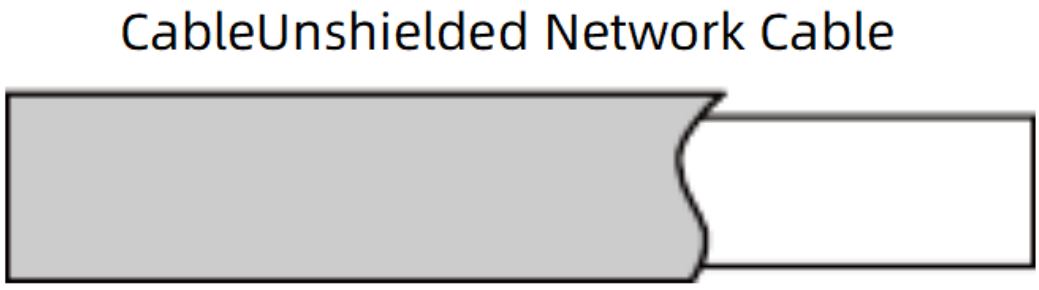


- Length requirements

When using the EtherCAT bus, the cable length between devices shall not exceed 100 meters; excessive length causes signal attenuation and impairs normal communication.

- Technical requirements

100% continuity test passed, with no short circuits, open circuits, miswiring, or poor contact. It is recommended to use cables with the following specifications.

| Item | Specification |
|---|---|
| Cable type | Flexible cross-connected S-FTP cat5e cable |
| Compliance standards | EIA/TIA568A, EN50173, ISO/IEC11801EIA/TI Bulletin TSB, EIA/TIA SB40-AC & TSB36 |
| Wire cross-section | AWG26 |
| Wire type | Twisted pair |
| Number of pairs | 4 |

- Pin Definition

| Pin | Signal (Ethernet 1000 Mbit/s) | Signal Direction | Description |
|---|---|---|---|
| 1 | TD+ | Output | Transmit data + |
| 2 | TD- | Output | Transmit data - |
| 3 | RD+ | Input | Data Receiving + |
| 4 | - (DC+) | - (Bidirectional) | Not used (data C+) |
| 5 | - (DC-) | - (Bidirectional) | Not used (data C-) |
| 6 | RD- | Input | Data Receiving - |
| 7 | - (DD+) | - (Bidirectional) | Not used (data D+) |
| 8 | - (DD-) | - (Bidirectional) | Not used (data D-) |

**⚠ Caution**

For Ethernet at 1000Mbit/s, pin 4, 5, 7 and 8 have different definitions compared with 100Mbit/s.

## 3.3 Power Cable Connection

The controller accepts an input DC voltage of 24 ±20% V DC with a rated input of 24 V DC. The power supply shall provide an output current of 5 A or higher. The power

connector is a 3-pin open terminal block with 5.08 mm pitch, corresponding to terminals marked "24V", "0V" and " " on the housing.

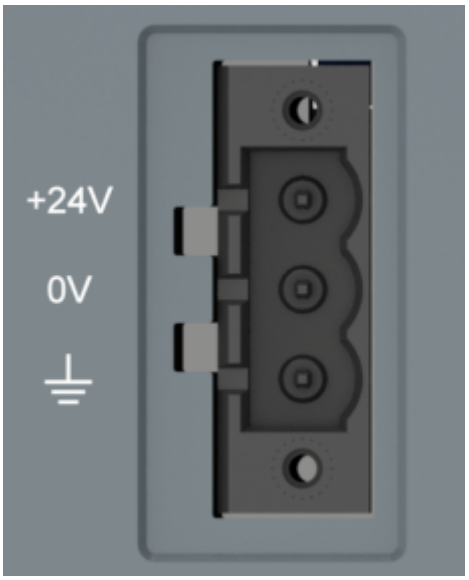


Figure 3-3 Power Interface Diagram

Table 3-1 Power Interface Connector Signal Definition

| Pin | Signal (Ethernet 1000 Mbit/s) | Signal Direction |
|---|---|---|
| 1 | 24V | +24V system power input |
| 2 | 0V | System power ground |
| 3 | | Housing protective ground |

Table 3-2 Power Input Specifications

| Parameter | Name | Min | Typ | Max | Unit |
|---|---|---|---|---|---|
| Operating voltage | VPower | 19.2 | 24.0 | 28.8 | V |
| Operating current | IPower | - | 3 | 5 | A |

## 3.4 Network Cable Connection

The controller provides 2 10/100M/1000M Ethernet interfaces and 2 EtherCAT master communication ports. The physical form of the connector is a standard RJ45 network cable socket.

The 10/100/1000M Ethernet ports are marked LANA and LANB on the housing; the EtherCAT master communication ports are marked EtherCAT1 and EtherCAT2.

Each Ethernet interface is equipped with two indicators: ACT and LINK, which display Ethernet connection status and data transmission status in real time.

All Ethernet interfaces are of the RJ-45 interface type.

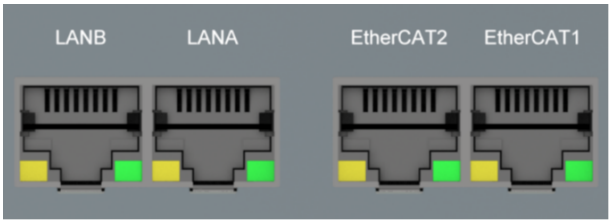


Figure 3-4 Ethernet Port Schematic Diagram

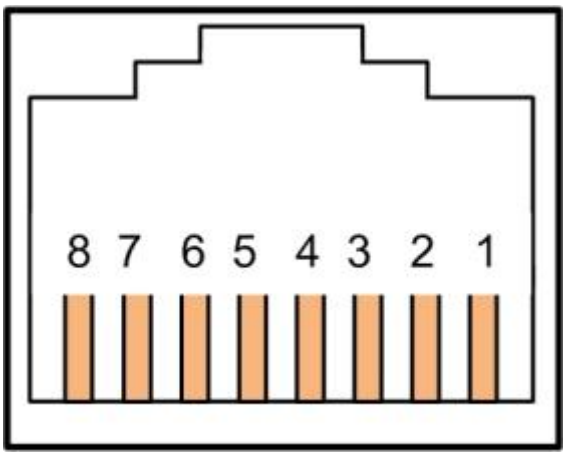


Figure 3-5 Ethernet Interface RJ-45

Table 3-3 RJ-45 Interface Pin Definition

| Pin No. | Pin Definition | Pin Description |
|---|---|---|
| 1 | TD+ | Transmit data differential positive signal |
| 2 | TD- | Transmit data differential negative signal |
| 3 | RD+ | Receive data differential positive signal |
| 6 | RD- | Receive data differential negative signal |
| 4,5,7,8 | NC | Reserved |

Table 3-4 Ethernet factory default IP address

| Network Name | Default IP |
|---|---|
| LANA | 192.168.0.250 |
| LANB | 192.168.1.250 |

To improve equipment communication reliability, Category 5e shielded twisted-pair cables with shielded molded RJ45 connectors shall be used. Requirements for Ethernet cables are specified as follows:

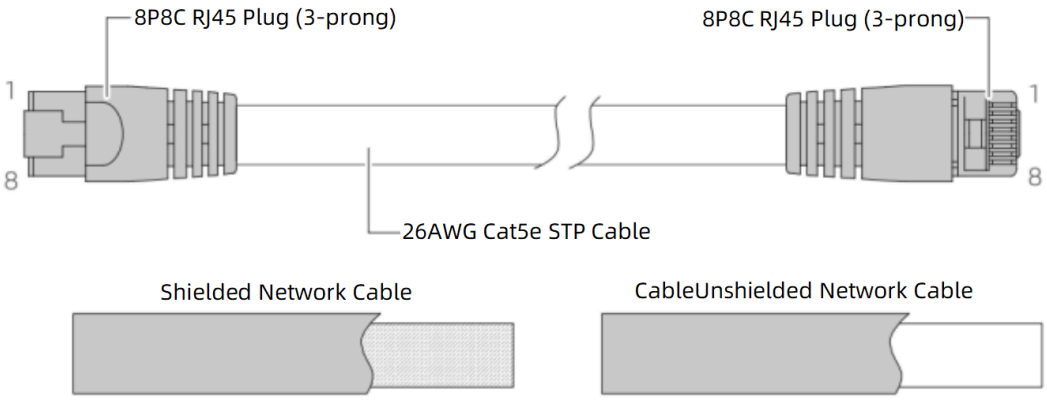


Figure 3-6 Ethernet Requirements

**⚠ Caution**

1. When using the EtherCAT bus, the total cable length between devices shall not exceed 100 meters. Excessive length causes signal attenuation and impairs communication stability and reliability.
2. In case of abnormal network communication, troubleshoot as follows:
   - First check for IP address conflicts;
   - After modifying the IP address or replugging the Ethernet port, verify whether the IP address of the device is occupied by other devices on the local area network.
   - If an IP conflict is confirmed, check alarm information via the Fault Diagnosis or System Operation Log page for further fault location.
3. Connection: Hold the RJ45 plug with cable, insert it vertically into the RJ45 Ethernet port until a distinct click is heard to confirm secure connection.
4. Removal: Press the release tab on the RJ45 plug, pull the connector out horizontally smoothly. Do not pull hard or askew to prevent port damage.

## 3.5 CAN Communication Cable Connection

The controller is equipped with 1 CAN communication interface to support communication complying with standard CAN protocol.

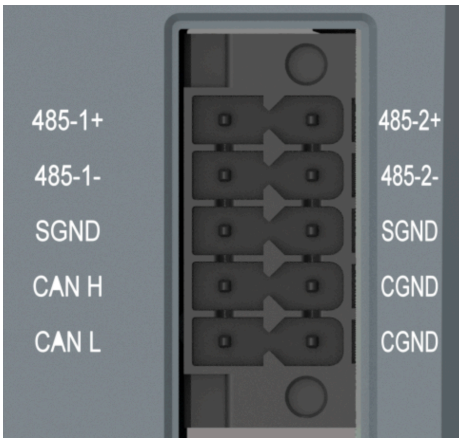


Figure 3-7 CAN Interface Diagram

Table 3-5 CAN Interface Pin Definition

| Pin Definition | Pin Description |
|---|---|
| CANH | CAN High: High-potential terminal of differential signal |
| CANL | CAN Low: Low-potential terminal of differential signal |
| CGND | CAN isolated signal ground |

CAN bus communication is half-duplex, meaning data transmission and reception operate in time division. Only one device can transmit data at any given time; other devices must wait for bus idle status before sending messages.

The 120 Ω terminating resistor of CAN communication module is disabled by factory default. Refer to the PLC Programming Software User Manual for terminating resistor configuration if required.

The wiring for a single CAN communication device is shown in the figure below.

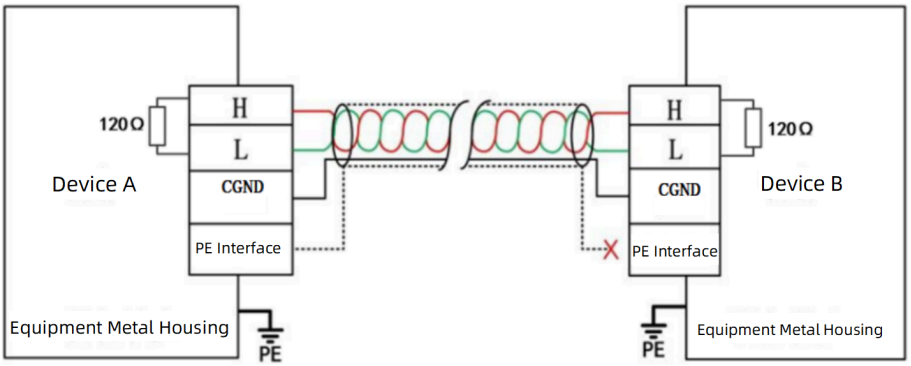


Figure 3-8 CAN Wiring Diagram

CAN bus transmits data via balanced differential signals. When multiple CAN devices form a CAN network, install one 120 Ω terminating resistor respectively on the

first and last device of the bus link only. Some CAN communication modules come with optional built-in 120 Ω terminating resistor, which users can configure via specific commands. See the wiring schematic below.

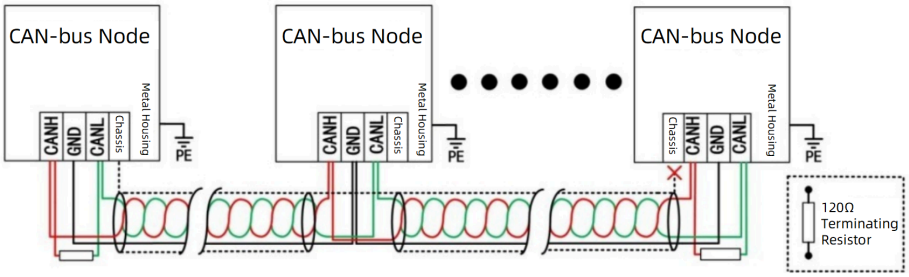


Figure 3-9 CAN Wiring Diagram

**⚠ Caution**

Check the silk-screen labels on both sides of terminals one by one during wiring to guarantee correct cable connection. Note: **Never connect CGND cable to lower input/output terminals**; incorrect wiring causes short circuit and component burnout. In addition, PE (protective earth) must not be connected to CGND.

## 3.6 RS485 Communication Cable Connection

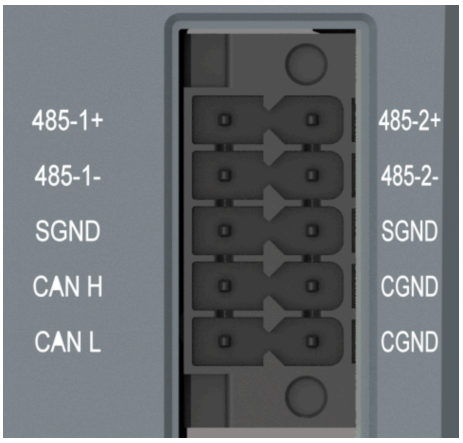


Figure 3-10 RS485 Interface Diagram

Table 3-6 RS485 Interface Pin Definition

| Pin Definition | Pin Description |
|---|---|
| RS485-1+ | RS485-1 A+, differential signal positive |
| RS485-1- | RS485-1 B-, differential signal negative stage |
| RS485-2+ | RS485-2 A+, differential signal positive |
| RS485-2- | RS485-2 B-, differential signal negative stage |

Table 3-6 RS485 Interface Pin Definition (continued)

| Pin Definition | Pin Description |
|---|---|
| SGND | RS485 isolated signal ground |

RS485 is a half-duplex communication standard: only one device may transmit data at any given time, and all remaining devices remain in receive mode. Communication between multiple devices is achieved via a single pair of twisted cables, which greatly simplifies wiring work. RS485 uses balanced differential transmission. The 120 Ω terminating resistor is disabled by default from factory; refer to PLC Programming Software User Manual for configuration instructions. Typical wiring for a single unit is shown in the figure below.

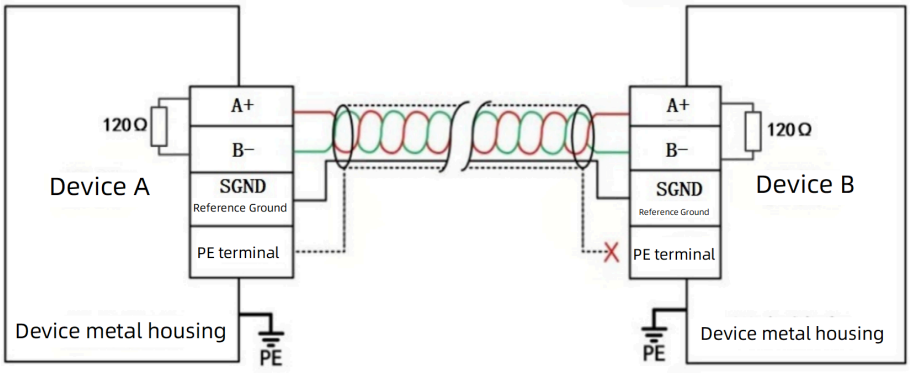


Figure 3-11 RS485 Wiring Diagram

When multiple RS485 devices form an RS485 network, enable the 120 Ω terminating resistor only on the first and last devices of the bus. The onboard RS485 port of this product features an optional built-in 120 Ω terminating resistor, configurable by dedicated user commands. Refer to the figure below for wiring layout.

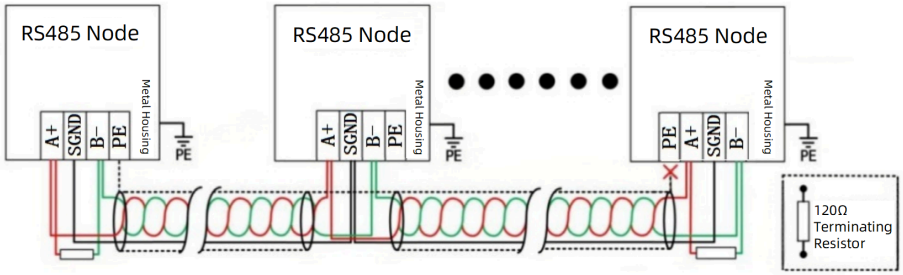


Figure 3-12 RS485 Wiring Diagram

**⚠ Caution**

Check the printed marking on each terminal before wiring to prevent incorrect cable connection. Note: **Never connect the SGND wire to lower digital input or output terminals**; improper connection causes short circuit and component burnout. Do not connect PE (protective earth) to SGND (signal ground).

## 3.7 Digital Input/Output Interface

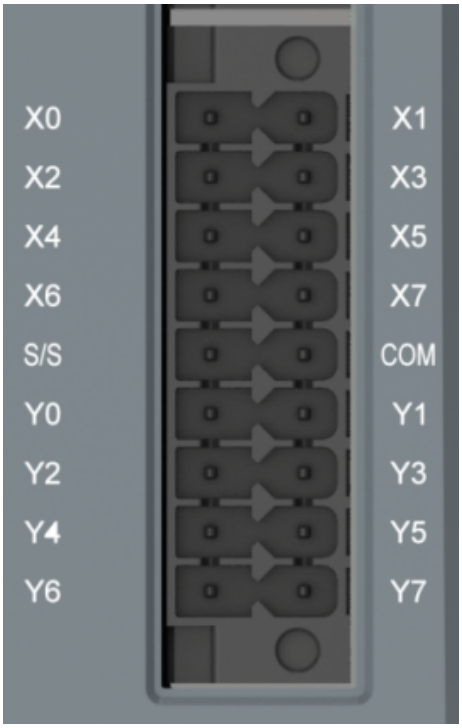


Figure 3-13 DI/DO Wiring Diagram

Table 3-7 Digital Input/Output Terminal Definition

| Terminal | Definition | Terminal | Definition |
|---|---|---|---|
| X0 | High-speed input 0 | X1 | High-speed input 1 |
| X2 | High-speed input 2 | X3 | High-speed input 3 |
| X4 | High-speed input 4 | X5 | High-speed input 5 |
| X6 | High-speed input 6 | X7 | High-speed input 7 |
| S/S | High-speed input common terminal | COM | High-speed output common terminal |
| Y0 | High-speed output 0 | Y1 | High-speed output 1 |
| Y2 | High-speed output 2 | Y3 | High-speed output 3 |
| Y4 | High-speed output 4 | Y5 | High-speed output 5 |

Table 3-7 Digital Input/Output Terminal Definition (continued)

| Terminal | Definition | Terminal | Definition |
|---|---|---|---|
| Y6 | High-speed output 6 | Y7 | High-speed output 7 |

Table 3-8 DI Digital Input Function Table

| Item | Specification |
|---|---|
| Channel | 8 x DI |
| Input type | DC digital input |
| Input method | Sink/source type |
| Input voltage/current | 24V DC, 5mA |
| Maximum input frequency | 200kHz |
| Frequency detection error | ±1 pulse |
| Input Impedance | 3.3kΩ |
| Detection voltage | 24 V (max rating: 30 V) |
| ON voltage range | 15V DC~30V DC |
| OFF voltage range | 0V DC~5V D |
| High-speed DI function | 1. High-speed DI (filtering supported)<br>2. Probe function<br>3. Hardware interrupt function<br>4. Encoder counting function (single-ended supported, differential unsupported) |

The circuit diagram of digital input interface is shown below.

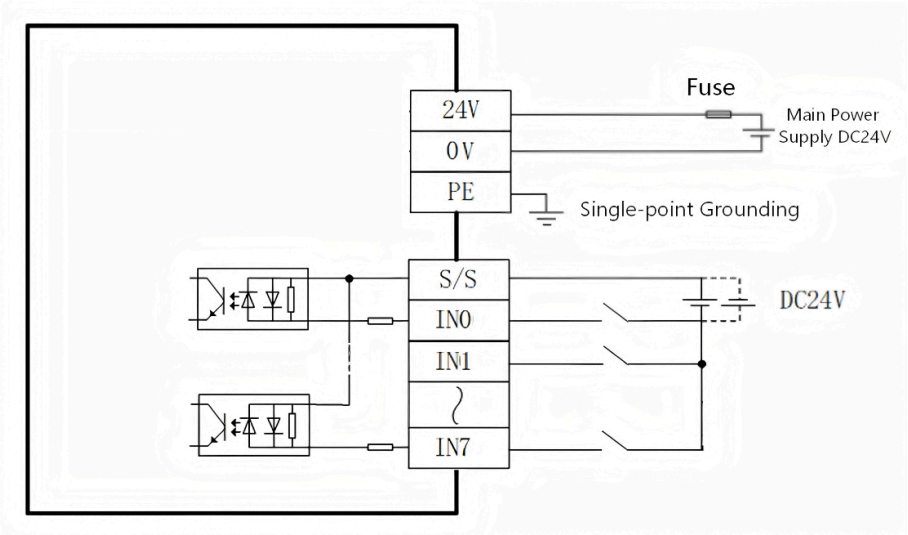


Figure 3-14 Digital Input Wiring Circuit Diagram

Table 3-9 DO Digital Output Function Table

| Item | Specification |
|---|---|
| Channel | 8 x DO |
| Output type | DC digital output, MOS tube |
| Output method | Sink type |
| Maximum output frequency | 200kHz<br>(External equivalent load ≥12mA required at 200kHz output) |
| Control circuit voltage | 5V DC ~24V DC |
| Minimum load | 5mA |
| Maximum output current | 400mA |
| Maximum voltage drop (ON) | 0.2V |
| Leakage current (OFF) | Below 0.1mA |
| Response time (ON) | 1us |
| Response time (OFF) | 1us |
| Isolation method | Isolation |
| Prevent short circuit output | Yes |
| High-speed DO function | 1. High-speed DO (filtering supported)<br>2. Pulse + direction output<br>3. Position comparison output |

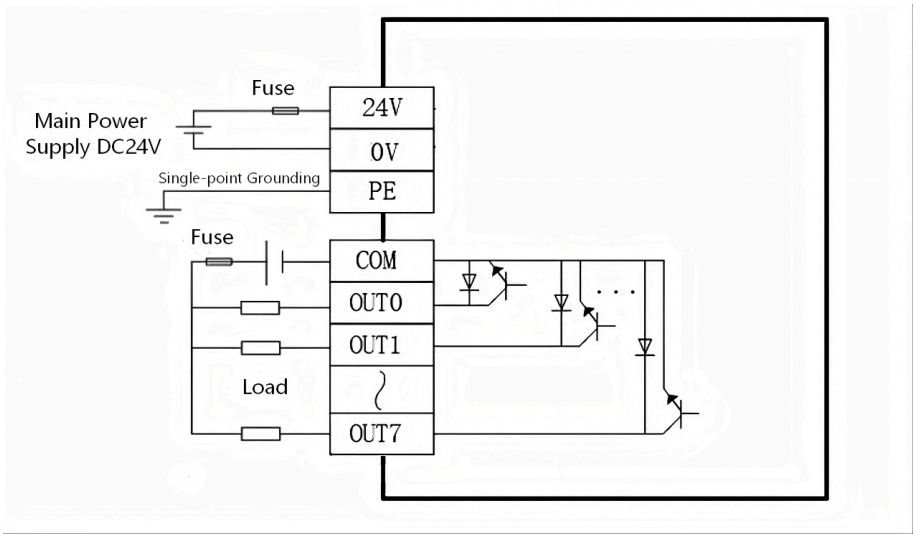


Figure 3-15 Digital Output Interface Circuit Diagram

# 4 Power-up and Power-down

## 4.1 Power-up

Prerequisite: The product has been fully powered down.

Operation steps: When the 24 V DC input power terminal is disconnected, connecting the 24 V DC input supply will automatically power on the device.

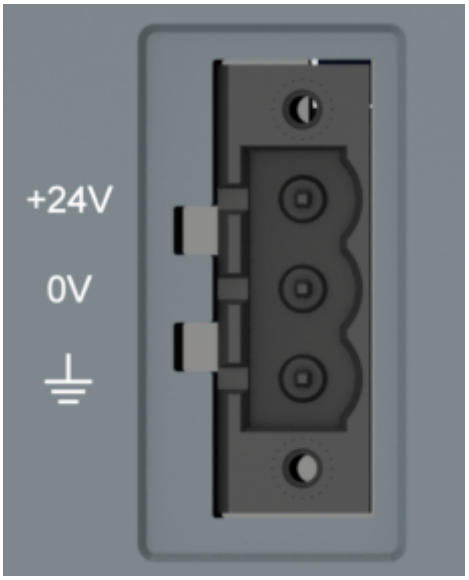


**⚠ Caution**

1. Do not touch terminals during energization to avoid electric shock hazard.
2. Do not disassemble this product, especially avoid disassembly while powered or shortly after power-off to prevent faults such as short circuits; Sharp internal parts and high-temperature components inside the product may cause personal injury.

## 4.2 Power-down

Prerequisite: This product is powered on.

Operation steps: Power off the device by directly disconnecting its 24V input power supply.

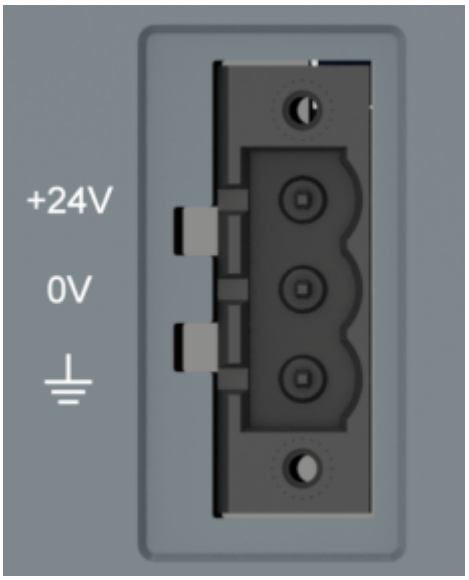


**⚠ Caution**

The product features around 5-second backup runtime upon power failure; it keeps operating for a period before full power-down.

# 5 Programming and Commissioning

For programming and commissioning procedures, refer to PLC Programming Software Operation Manual and Mid-to-large PLC Instruction Manual (Including Motion Control).

# 6 Maintenance

## 6.1 Routine Maintenance

The components of this product may deteriorate over time due to environmental conditions, so regular inspection is required. The standard inspection interval is once every 6 months to 1 year. This interval may be shortened as appropriate depending on the surrounding environment. If any item does not meet the acceptance criteria, take appropriate corrective actions.

| No. | Item | Inspection Item | Judgment criteria | Solution |
|---|---|---|---|---|
| 1 | Power supply | Measure voltage at power terminal block to verify voltage fluctuation is within specified tolerance range | 24 V DC<br>(-15% ~ +20%) | Please use a multimeter to check and adjust the terminal blocks and control the power supply within the allowable voltage range |
| 2 | Ambient environment | Check whether ambient temperature (cabinet internal temperature equals ambient temperature when installed inside cabinet) is within the acceptable range | -5℃ ~ +55℃ | Please use a thermometer to measure the ambient temperature and adjust the surrounding environment to control the ambient temperature within the range of -5℃ to 55℃. |
| | | Check whether ambient humidity (cabinet internal humidity equals ambient humidity when installed inside cabinet) is within the acceptable range | 10% ~ 95% RH, no condensation allowed | Measure ambient humidity with a hygrometer and improve surrounding conditions to keep operating humidity within 10% ~ 95% RH. Check for condensation when humidity fluctuates sharply. |
| | | Check for direct sunlight exposure | No direct sunlight allowed | Please take shielding measures |
| | | Check for dust, dirt, salt and iron filings | None allowed | Please remove and take shielding measures |
| | | Check for splashes of water, oil and chemicals | No splashing contamination | Please remove and take shielding measures |
| | | Check for corrosive or flammable gas. | None allowed | Please perform detection using odor or gas sensors, etc. |
| | | Check if vibration or impact is directly applied to the main unit | Check whether conditions comply with specified vi- | Please provide cushioning materials for vibra- |

| No. | Item | Inspection Item | Judgment criteria | Solution |
|---|---|---|---|---|
| | | | bration and shock resistance ratings | tion and impact resistance |
| | | Check for nearby interference sources | None allowed | Please stay away from sources of interference or take shielding measures |
| 3 | Installation and wiring status | Check whether cable connectors are fully inserted and locked | No looseness | Please insert completely and lock with screws. |
| | | Check if terminal screws for external wiring are loose | No looseness | Please use a Phillips screwdriver to tighten |
| | | Check if crimp terminals of external wiring are placed too close together | Maintain proper clearance | Please perform visual inspection and correction |
| | | Check if external wiring cables are about to break | No abnormal appearance | Please perform visual inspection and replace the cable. |
| 4 | Real-time clock battery (coin cell battery) | Check whether the service life has expired or reached its rated lifespan | Whether the usage period has exceeded three years | It is recommended to replace the battery every three years; refer to *Battery Maintenance* for replacement procedure. |

## 6.2 Host or Module Maintenance

If the host or module needs to be replaced due to damage or other reasons, it can be replaced with the host and module powered down.

1. Disassemble the old host or module.
   a. Pry up the guide rail latch with a flat screwdriver or similar tool.
   b. Tilt the host slightly and slide it down to disengage the bottom fixing latch from the guide rail, then pull the host away from the rail. After removal, press the top of the latch to reset it.

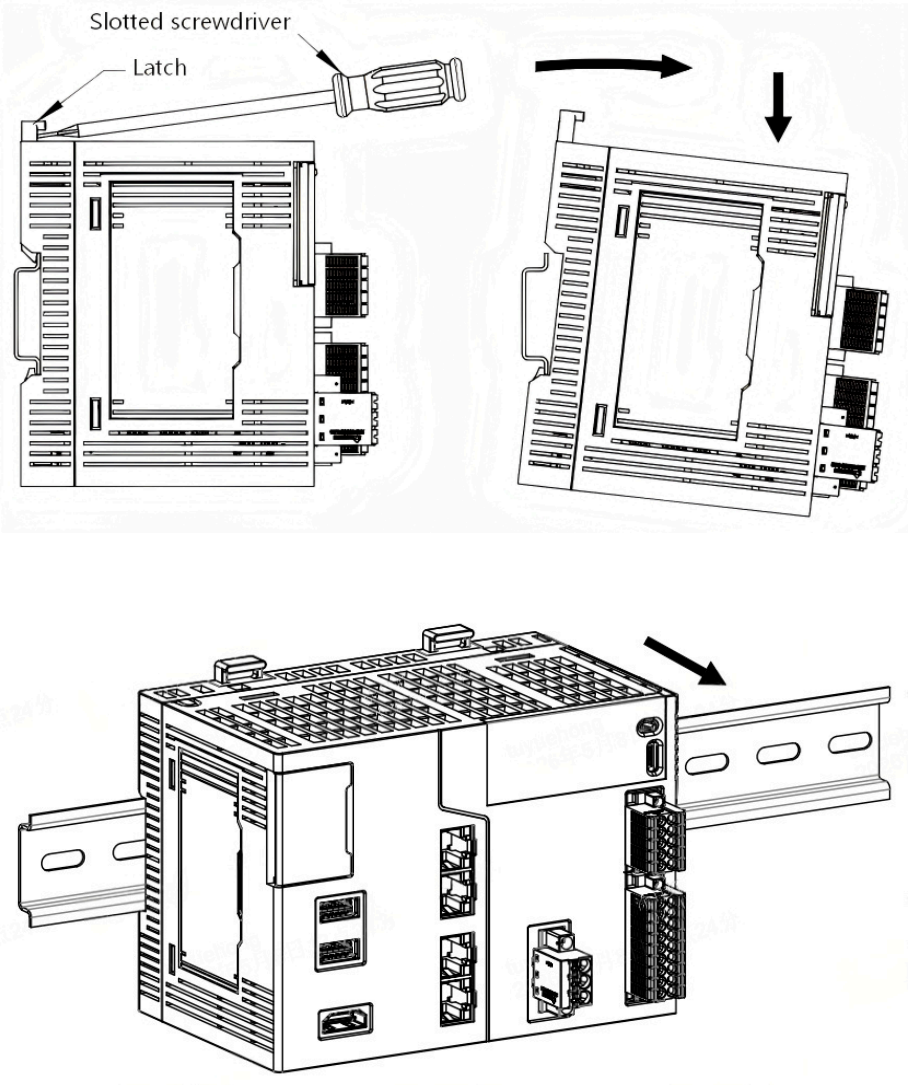


Figure 6-1 Host or Module Disassembly

2. To install a new host or module, please refer to the *Installation Operations* chapter.

## 6.3 Battery Maintenance

The built-in Real-Time Clock (RTC) of the PLC performs timekeeping, while the CMOS data of the BIOS needs to be retained during power loss. Both functions rely on battery power supply. If no battery is fitted or the battery is exhausted, the clock will halt and the BIOS CMOS configuration data will be lost upon power cut, with the system reverting to factory default settings.

To guarantee normal RTC operation of the PLC, replace the battery every three years. Refer to *Basic Specifications* for detailed battery parameters.

**⚠ Caution**

After new battery replacement, the RTC may stop counting time and reset to factory defaults.

1. Cut off power to the PLC.
2. Remove the old battery.
   a. Pry open the left-side cover with a flat-blade screwdriver following the orientation shown in the left figure.
   b. Remove the old battery from the holder at the marked position (arrow indicator) using a flat-blade screwdriver as illustrated in the right figure.

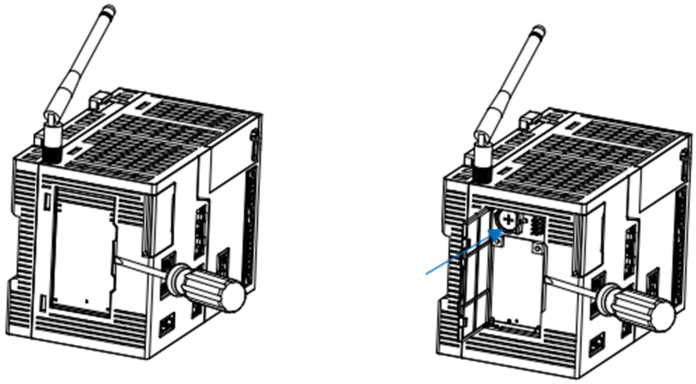

Figure 6-2 Remove the Old Battery

3. Install a new battery.
   a. Place the new battery in the battery holder shown on the left.

   **⚠ Caution**

   Do not reverse battery polarity. Place the battery with its positive terminal facing upward when loading into the battery drawer; push the drawer into the compartment with the positive terminal pointing left.

b. Close the left-side cover as shown in the right figure.

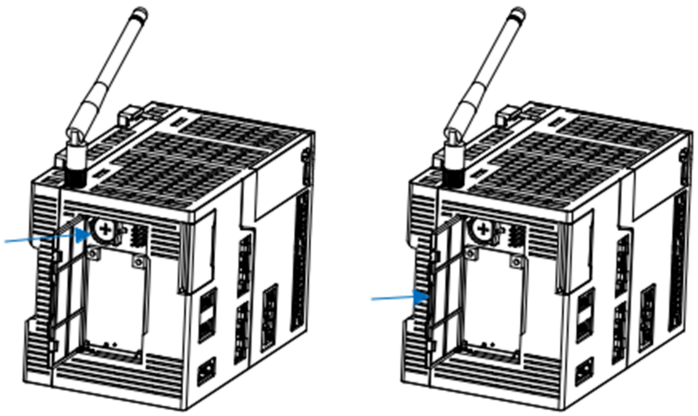

Figure 6-3 Install the New Battery

## 6.4 Terminal Maintenance

Power and communication terminals adopt pluggable design and can be replaced only when the product is powered off.

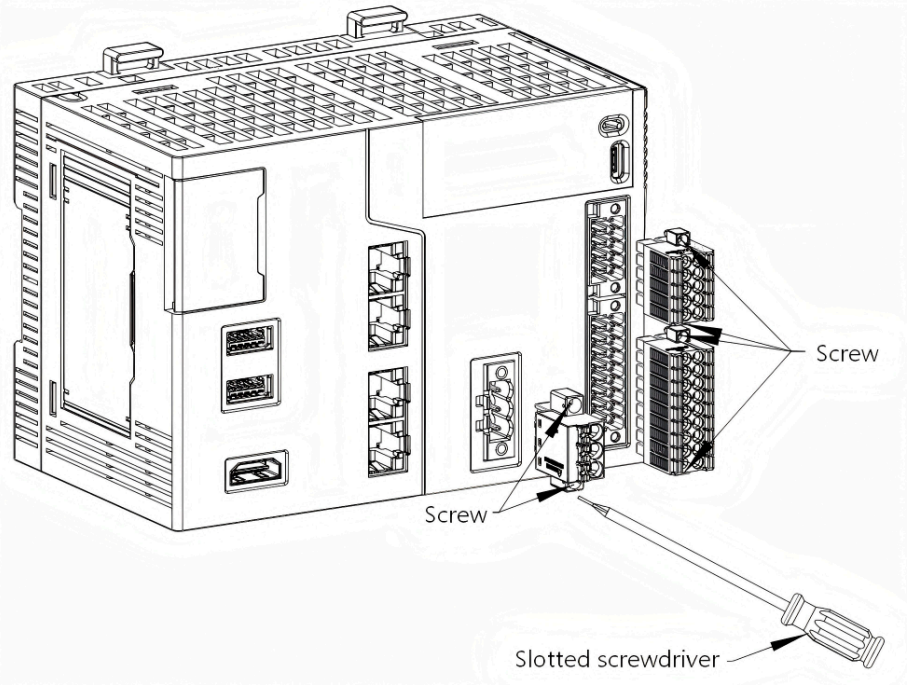


1. Loosen screws on both sides of the terminal with a 2.5 mm flathead screwdriver.
2. Pull out the terminal with two fingers.

3. Align and insert the replacement terminal into the terminal socket.
4. Tighten the screws on both sides of the terminal with the flathead screwdriver.

## 6.5 Firmware Upgrade

### Via USB flash drive or TF card

**⚠ Caution**

- Never modify the PLC firmware upgrade package name.
- The PLC firmware upgrade package can only be placed in the root directory of the USB flash drive (TF card), and cannot be placed in other subdirectories.
- Do not remove the USB flash drive (TF card) until the firmware upgrade is complete.
- Do not cut off power during firmware upgrade.

Prerequisite:

- A reputable brand USB flash drive (TF card) has been prepared.
- The firmware upgrade package has been obtained from ESTUN technical personnel.
- The PLC is in normal operation.

1. Copy the PLC firmware upgrade package to the root directory of the USB flash drive (TF card), insert the USB flash drive (TF card) into the corresponding card slot of the PLC, and wait for the automatic upgrade. After the upgrade is complete, remove the USB flash drive or eject the TF card, the PLC will restart automatically.
2. After the restart, the PLC can be used normally.

**Note**

It is recommended to upgrade the firmware via USB flash drive (TF card) under the guidance of ESTUN technicians.

## Via the EsProMotionTool Tool

### ⚠ Caution

- Do not modify the file name of the PLC firmware upgrade package.
- Do not cut off power during firmware upgrade.

Prerequisite:

- The firmware upgrade package has been obtained from ESTUN technical personnel.
- The PLC is in normal operation.

1. Select "**Tool -> EsProMotionTool**" on the main interface to open the "**EsProMotionTool**" window as shown below.

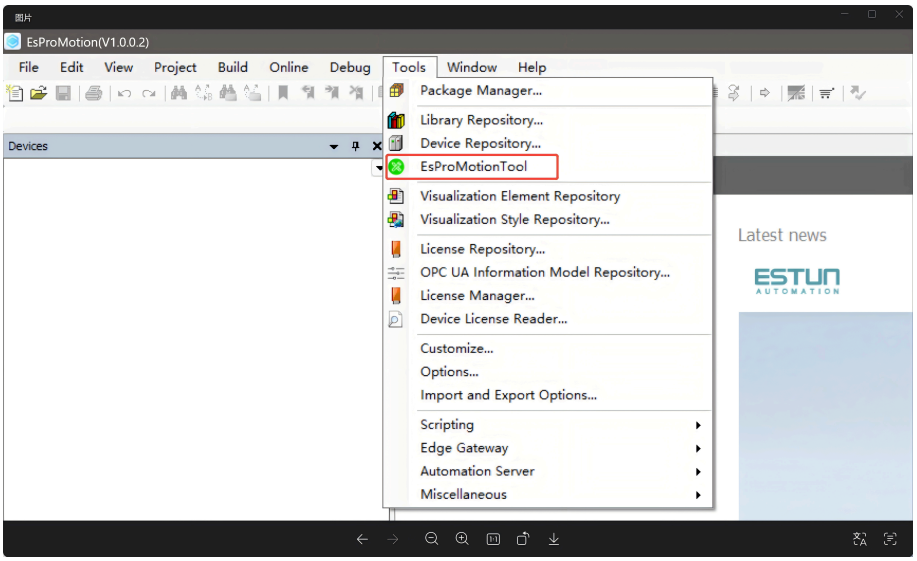

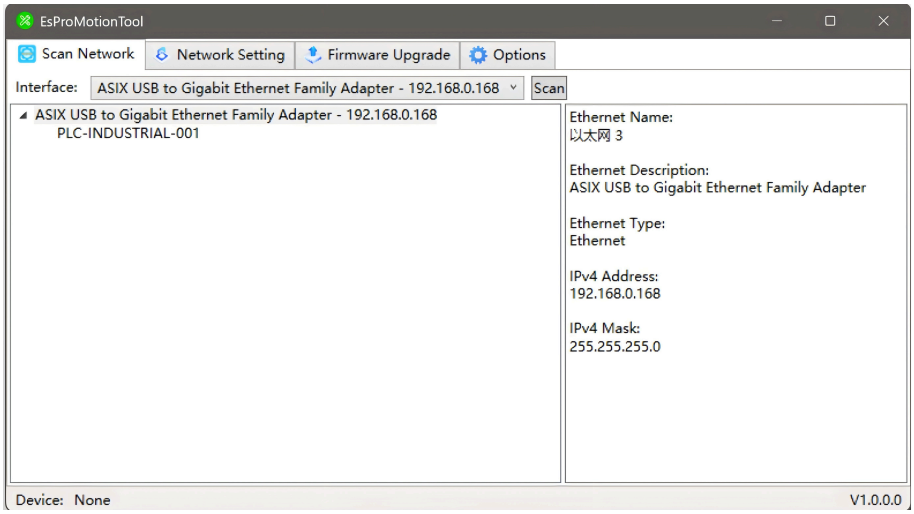


2. Click **"Scan"** , double-click **"select device"** , and the device model displayed in the lower left corner indicates a successful connection.

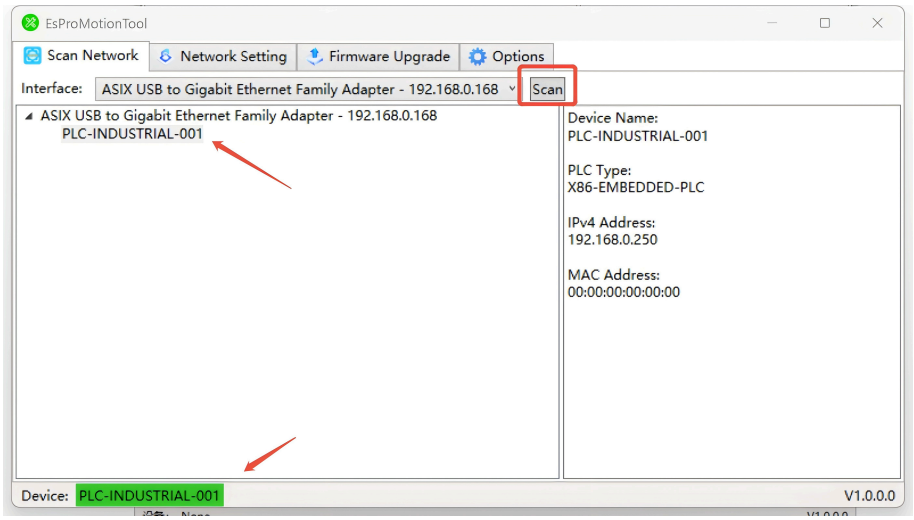


3. Click **"Firmware Upgrade"** to enter the corresponding interface, as shown below.

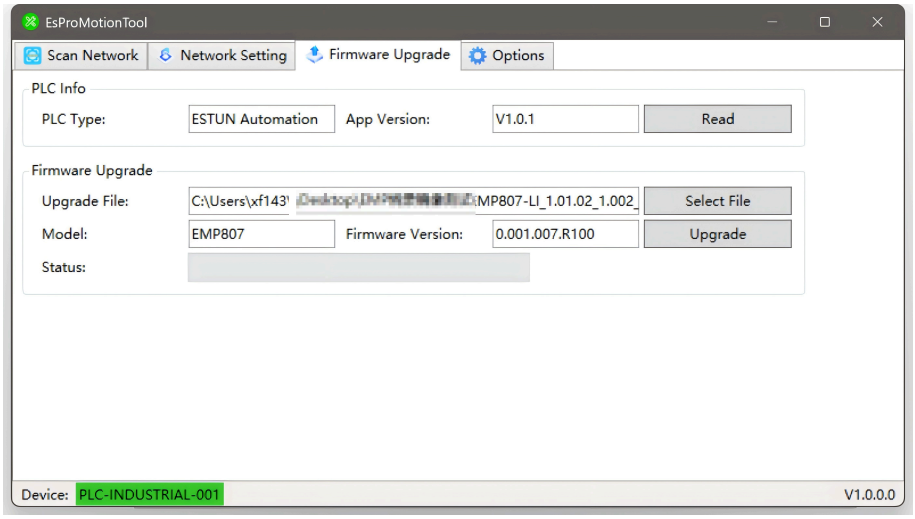


4. Click **"Select File"** and select the locally stored firmware upgrade package.

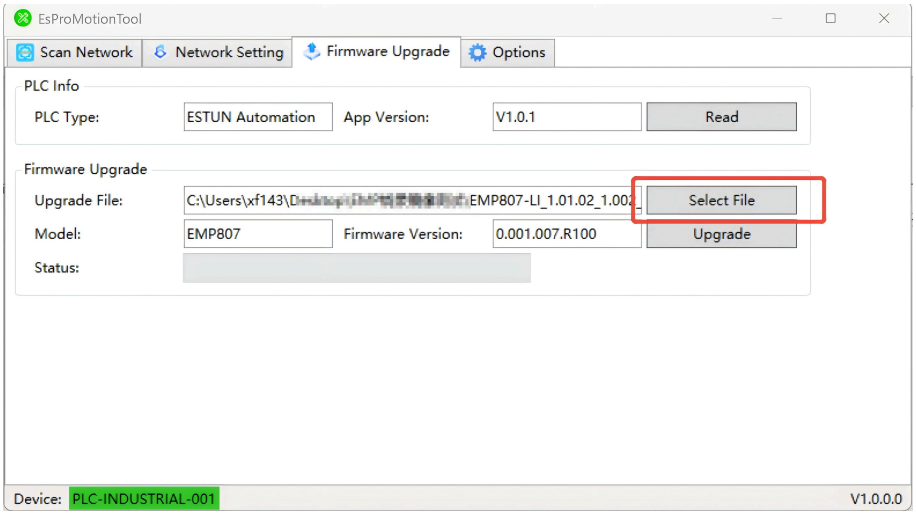


5. Click **"Upgrade"**.
   The device restarts automatically after upgrade, with a pop-up displaying **"Upgrade Successful"**.

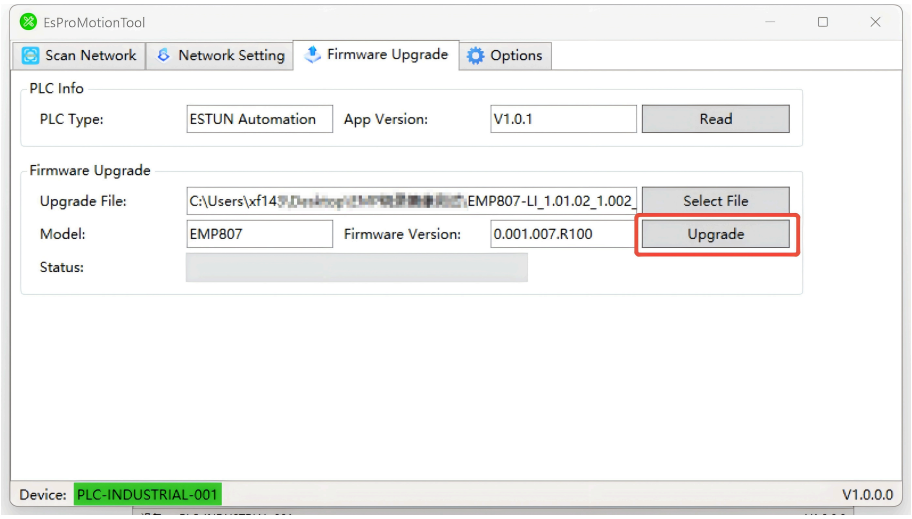


6. Click **"Read"** to retrieve firmware version information and verify upgrade success.

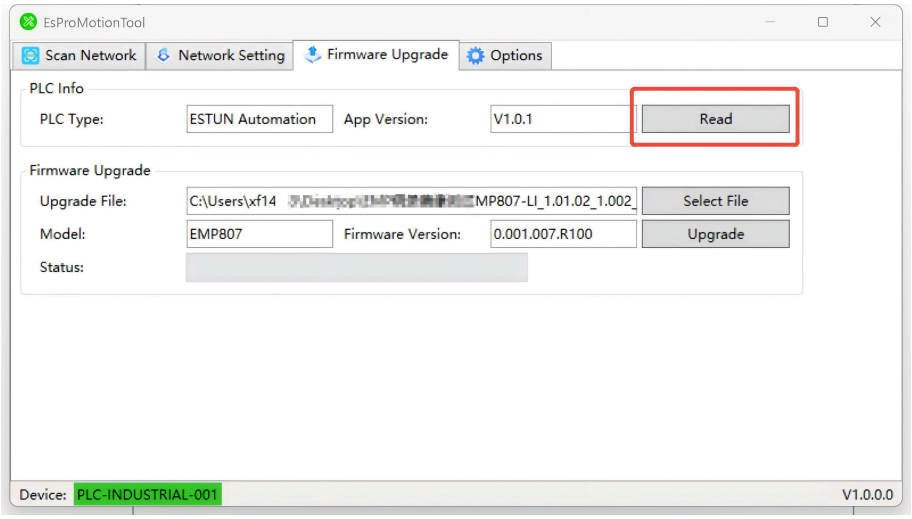

# Appendix A PLC-Related Function Fault Codes

The fault IDs for PLC-related functions are independent and will not conflict with other fault IDs of this product. These fault IDs are displayed on the LCD screen in the format shown in the figure below.

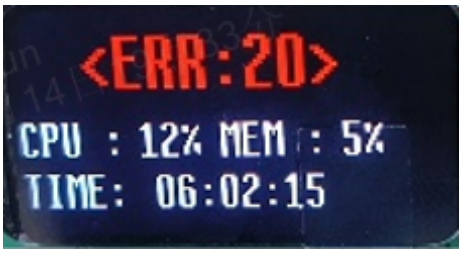


- **Runtime fault code**

Refer to the following table for definitions and troubleshooting measures of each Runtime fault code.

| Fault ID (Hexa-decimal) | Description Information |
|---|---|
| **General Error** | |
| 0x0000 | No error<br>No error |
| 0x0001 | General error<br>General error |
| 0x0002 | Invalid parameter<br>Invalid parameter |
| 0x0003 | Not initialized<br>Not initialized |
| 0x0004 | Version conflict<br>Version conflict |
| 0x0005 | Operation timed out<br>Operation timed out |
| 0x0006 | Insufficient buffer<br>Insufficient buffer |
| 0x000A | Operation pending<br>Operation pending |
| 0x000B | Too many pending calls<br>Too many pending calls |
| 0x000C | Function not implemented |

| Fault ID (Hexa-decimal) | Description Information |
|---|---|
| | Function not implemented |
| 0x000D | Invalid ID<br>Invalid ID |
| 0x000E | Integer overflow<br>Integer overflow |
| 0x000F | Invalid buffer size<br>Invalid buffer size |
| 0x0010 | No object with specified name<br>No object with specified name |
| 0x0011 | No heap memory available<br>No heap memory available |
| 0x0012 | Duplicate object<br>Duplicate object |
| 0x0013 | Memory overwrite<br>Memory overwrite |
| 0x0014 | Invalid handle<br>Invalid handle |
| 0x0015 | End of object reached<br>End of object reached |
| 0x0016 | No changes done<br>No changes done |
| 0x0017 | Invalid interface<br>Invalid interface |
| 0x0018 | Functionality not supported<br>Functionality not supported |
| 0x0019 | No access rights<br>No access rights |
| 0x001A | Resource limits exceeded<br>Resource limits exceeded |
| 0x001B | Entries remaining due to buffer limit<br>Entries remaining due to buffer limit |
| 0x001C | Invalid session ID<br>Invalid session ID |
| 0x001D | Exception occurred<br>Exception occurred |
| 0x001E | Signature mismatch |

| Fault ID (Hexa-decimal) | Description Information |
|---|---|
| | Signature mismatch |
| 0x001F | Version mismatch<br>Version mismatch |
| 0x0020 | Type mismatch<br>Type mismatch |
| 0x0021 | ID mismatch<br>ID mismatch |
| 0x0022 | Consistency error<br>Consistency error |
| 0x0023 | No COMM_CYCLE needed<br>No COMM_CYCLE needed |
| 0x0024 | Do not suspend task after exception<br>Do not suspend task after exception |
| 0x0025 | Memory lock failed<br>Memory lock failed |
| 0x0026 | License missing<br>License missing |
| 0x0027 | Operation denied<br>Operation denied |
| 0x0028 | Device error<br>Device error |
| 0x0029 | Disk full<br>Disk full |
| 0x0030 | CRC check failed<br>CRC check failed |
| 0x0031 | Media erase error<br>Media erase error |
| 0x0032 | File error<br>File error |
| 0x0033 | No retain memory available<br>No retain memory available |
| 0x0034 | Below minimum limit<br>Below minimum limit |
| 0x0035 | Exceeded maximum limit<br>Exceeded maximum limit |
| 0x0036 | Size mismatch |

| Fault ID (Hexa-decimal) | Description Information |
|---|---|
| | Size mismatch |
| 0x0037 | Call again to proceed<br>Call again to proceed |
| 0x0038 | Nothing to do<br>Nothing to do |
| 0x0039 | Security checks failed<br>Security checks failed |
| 0x003A | Invalid sequence<br>Invalid sequence |
| 0x003B | Invalid reference<br>Invalid reference |
| 0x003C | Conversion incomplete<br>Conversion incomplete |
| 0x003D | Too many retries<br>Too many retries |
| 0x003E | Unaligned memory access<br>Unaligned memory access |
| 0x003F | Password must be changed<br>Password must be changed |
| 0x0040 | Re-authentication required<br>Re-authentication required |
| 0x0041 | Re-login required<br>Re-login required |
| 0x0042 | Invalid URL<br>Invalid URL |
| 0x0043 | Invalid component state<br>Invalid component state |
| 0x0044 | User mismatch<br>User mismatch |
| 0x0045 | Service not ready yet<br>Service not ready yet |
| 0x0046 | User management must be activated<br>User management must be activated |
| 0x0047 | No user management active<br>No user management active |
| 0x0048 | Invalid string encoding |

| Fault ID (Hexa-decimal) | Description Information |
|---|---|
| | Invalid string encoding |
| 0x0049 | Target mismatch<br>Target mismatch |
| 0x004A | Client in read-only mode<br>Client in read-only mode |
| 0x004B | License exceeded<br>License exceeded |
| 0x004C | Async service exception<br>Async service exception |
| 0x004D | No signature in object<br>No signature in object |
| 0x004E | Password policy violation<br>Password policy violation |
| 0x004F | License expired<br>License expired |
| 0x0050 | License occupied<br>License occupied |
| **General Network Error** | |
| 0x0100 | Network general failure<br>Network general failure |
| 0x0101 | Not connected<br>Not connected |
| 0x0102 | Message size too big<br>Message size too big |
| 0x0103 | No route to host<br>No route to host |
| 0x0104 | Network timeout<br>Network timeout |
| 0x0105 | Invalid network packet<br>Invalid network packet |
| 0x0106 | Invalid address<br>Invalid address |
| **Communication Error** | |
| 0x0120 | Invalid service packet<br>Invalid service packet |
| 0x0121 | Service does not exist |

| Fault ID (Hexa-decimal) | Description Information |
|---|---|
| | Service does not exist |
| 0x0122 | Service version mismatch<br>Service version mismatch |
| 0x0140 | Invalid client packet<br>Invalid client packet |
| 0x0170 | Login failed<br>Login failed |
| 0x0171 | Session timed out<br>Session timed out |
| 0x0172 | Channel closed<br>Channel closed |
| 0x0181 | Invalid channel ID<br>Invalid channel ID |
| 0x0182 | Channel timeout<br>Channel timeout |
| 0x0183 | Protocol error<br>Protocol error |
| 0x0184 | Checksum error<br>Checksum error |
| 0x0185 | Host mode violation<br>Host mode violation |
| 0x0186 | Peer mode violation<br>Peer mode violation |
| 0x0187 | No more channels available<br>No more channels available |
| 0x0188 | Channel closed by peer<br>Channel closed by peer |
| 0x0189 | Message exceeds buffer size<br>Message exceeds buffer size |
| 0x018A | Request not handled<br>Request not handled |
| 0x018B | Channel closed due to shut down<br>Channel closed due to shutdown |
| 0x018C | Encryption not ready<br>Encryption not ready |
| 0x0190 | Not a server node |

| Fault ID (Hexa-decimal) | Description Information |
|---|---|
| | Not a server node |
| 0x01A1 | Invalid channel ID<br>Invalid channel ID |
| 0x01A2 | Connection timeout<br>Connection timeout |
| 0x01A3 | Protocol error<br>Protocol error |
| 0x01A4 | Checksum error<br>Checksum error |
| 0x01A5 | Host mode violation<br>Host mode violation |
| 0x01A6 | Peer mode violation<br>Peer mode violation |
| 0x01A7 | No more channels available<br>No more channels available |
| 0x01A8 | Channel closed by peer<br>Channel closed by peer |
| 0x01A9 | Message exceeds buffer size<br>Message exceeds buffer size |
| 0x01AA | No communication buffer<br>No communication buffer |
| 0x01C0 | Invalid gateway packet<br>Invalid gateway packet |
| 0x01C1 | Gateway protocol error<br>Gateway protocol error |
| 0x01C2 | Gateway version not supported<br>Gateway version not supported |
| 0x01C3 | Auth module not available<br>Auth module not available |
| 0x01C4 | Unknown command<br>Unknown command |
| 0x01C5 | Request canceled<br>Request canceled |
| 0x01C6 | Unknown request reference<br>Unknown request reference |
| 0x01C7 | Cancel failed |

| Fault ID (Hexa-decimal) | Description Information |
|---|---|
| | Cancel failed |
| 0x01C8 | Invalid connection handle<br>Invalid connection handle |
| 0x01C9 | Too many connections<br>Too many connections |
| 0x01CA | Parameter not supported<br>Parameter not supported |
| 0x01CB | Command not supported<br>Command not supported |
| 0x01CC | Client timeout<br>Client timeout |
| 0x01CD | Gateway timeout<br>Gateway timeout |
| 0x0201 | Socket not initialized<br>Socket not initialized |
| 0x0202 | Invalid socket handle<br>Invalid socket handle |
| 0x0203 | Address family not supported<br>Address family not supported |
| 0x0204 | Protocol not supported<br>Protocol not supported |
| 0x0205 | No socket buffer<br>No socket buffer |
| 0x0206 | Operation would block<br>Operation would block |
| 0x0207 | Address in use<br>Address in use |
| 0x0208 | Address not available<br>Address not available |
| 0x0209 | Connection refused<br>Connection refused |
| 0x020A | Socket timed out<br>Socket timed out |
| 0x020B | Host not found<br>Host not found |
| 0x020C | Host unreachable |

| Fault ID (Hexa-decimal) | Description Information |
|---|---|
| | Host unreachable |
| 0x020D | Already connected<br>Already connected |
| 0x020E | Not connected<br>Not connected |
| 0x020F | Socket closed<br>Socket shut down |
| 0x0210 | Message too big<br>Message too big |
| 0x0211 | Socket closed<br>Socket closed |
| 0x0300 | Tag missing<br>Tag missing |
| 0x0301 | Unknown command group<br>Unknown command group |
| 0x0302 | Unknown command<br>Unknown command |
| 0x0303 | Service incomplete<br>Service incomplete |
| 0x0304 | Protocol mismatch<br>Protocol mismatch |
| 0x0400 | Tag overlap<br>Tag overlap |
| 0x0401 | Buffer overrun<br>Buffer overrun |
| 0x0402 | Max nesting depth exceeded<br>Max nesting depth exceeded |
| 0x0403 | No current tag<br>No current tag |
| 0x0404 | Not a data tag<br>Not a data tag |
| 0x0405 | Not a container tag<br>Not a container tag |
| 0x0406 | Not at toplevel<br>Not at toplevel |
| 0x0407 | Invalid alignment |

| Fault ID (Hexa-decimal) | Description Information |
|---|---|
| | Invalid alignment |
| 0x0408 | Unexpected tag data size<br>Unexpected tag data size |
| **Application Component Error** | |
| 0x0500 | Application exists<br>Application exists |
| 0x0501 | Application not exist<br>Application not exist |
| 0x0502 | Invalid session ID<br>Invalid session ID |
| 0x0503 | Invalid data ID<br>Invalid data ID |
| 0x0504 | Application not loaded<br>Application not loaded |
| 0x0505 | No session ID specified<br>No session ID specified |
| 0x0506 | Unresolved reference<br>Unresolved reference |
| 0x0507 | Signature mismatch<br>Signature mismatch |
| 0x0508 | Load retain data failed<br>Load retain data failed |
| 0x0509 | External lib version mismatch<br>External lib version mismatch |
| 0x050A | Retain area mismatch<br>Retain area mismatch |
| 0x050B | Single cycle on breakpoint<br>Single cycle on breakpoint |
| 0x050C | Create boot project failed<br>Create boot project failed |
| 0x050D | Breakpoint condition too complex<br>Breakpoint condition too complex |
| 0x050E | Breakpoint not set<br>Breakpoint not set |
| 0x050F | Interpreter code too complex<br>Interpreter code too complex |

| Fault ID (Hexa-decimal) | Description Information |
|---|---|
| 0x0510 | Create boot project failed (disk full)<br>Create boot project failed (disk full) |
| 0x0511 | Load C integration modules failed<br>Load C integration modules failed |
| 0x0512 | Do not initialize area<br>Do not initialize area |
| 0x0513 | Mapped area not found<br>Mapped area not found |
| 0x0514 | Signature missing<br>Signature missing |
| 0x0515 | Decryption failed<br>Decryption failed |
| 0x0516 | Encryption missing<br>Encryption missing |
| 0x0517 | Signature and encryption missing<br>Signature and encryption missing |
| 0x0518 | Breakpoint not deleted<br>Breakpoint not deleted |
| **TLS Error** | |
| 0x0600 | TLS internal error<br>TLS internal error |
| 0x0601 | Random generator not seeded<br>Random generator not seeded |
| 0x0602 | Invalid socket type for TLS<br>Invalid socket type for TLS |
| 0x0603 | TLS handshake already done<br>TLS handshake already done |
| 0x0610 | TLS connection closed<br>TLS connection closed |
| 0x0611 | Retry TLS operation<br>Retry TLS operation |
| 0x0612 | Transport layer error<br>Transport layer error |
| 0x0613 | TLS want to read<br>TLS want read |
| 0x0614 | TLS want to write |

| Fault ID (Hexa-decimal) | Description Information |
|---|---|
| | TLS want write |
| 0x0620 | TLS certificate invalid<br>TLS certificate invalid |
| 0x0621 | TLS certificate self-signed<br>TLS certificate self-signed |
| 0x0622 | TLS certificate expired<br>TLS certificate expired |
| **X509 Certificate Error** | |
| 0x0701 | Unable to get issuer cert<br>Unable to get issuer cert |
| 0x0702 | Unable to get CRL<br>Unable to get CRL |
| 0x0703 | Unable to decrypt cert signature<br>Unable to decrypt cert signature |
| 0x0704 | Unable to decrypt CRL signature<br>Unable to decrypt CRL signature |
| 0x0705 | Unable to decode issuer public key<br>Unable to decode issuer public key |
| 0x0706 | Certificate signature failure<br>Certificate signature failure |
| 0x0707 | CRL signature failure<br>CRL signature failure |
| 0x0708 | Certificate not yet valid<br>Certificate not yet valid |
| 0x0709 | Certificate has expired<br>Certificate has expired |
| 0x070A | CRL not yet valid<br>CRL not yet valid |
| 0x070B | CRL has expired<br>CRL has expired |
| 0x070C | Error in cert not before field<br>Error in cert not before field |

# For a Better Life


## ESTUN AUTOMATION CO., LTD.

1888 Jiyin Avenue, Jiangning District Nanjing City, Jiangsu Province
+86-25-52785866 www.estun.com
+86-25-52785576 info@estun.com

Branch Offices

### ESTUN Robotics Deutschland GmbH
Lorcher Straße 121-131 73529 Schwäbisch Gmünd - Germany
info.de@estun-europe.eu +49 151 11634965
Germany、Austria、Switzerland

### ESTUN Robotics Europe AG Branch Italia
Via Carlo Jucker 28 20025 Legnano (MI) - Italy
info.it@estun-europe.eu +39 0331 177 2018
Italy、Slovenia、Croatia、Bosnia、Romania
Bulgaria、North Macedonia、Albania、Greece

### ESTUN Robotics Europe AG, Sucursal en España
Calle 27, 10-16, Sector BZ (DFactory) 08040 Barcelona - Spain
info.es@estun-europe.eu +34 670 929 531
Spain、Portugal、United Kingdom、Ireland

### ESTUN Robotics Europe SA Oddział w Polsce
Ul. Maszynowa 8 55-330 Źródła - Poland
info.pl@estun-europe.eu +48 71 715 70 00
Poland、Belgium、Netherlands、Luxemburg、Sweden、Denmark、Finland
Lithuania、Estonia、Latvia、Hungary、Serbia、Montenegro、Ukraine

### ESTUN Robotics Europe AG, odštěpný závod v České republice
Holandská 878/2 639 00 Brno - Czech Republic
info.cz@estun-europe.eu +420 518 888 260
Czech Republic、Slovakia

### ESTUN TR OTOMASYON VE ROBOT TEKNOLOJİLERİ SANAYİ TİC. A.Ş.
Küçükbakkalköy Mah. Yüksel Cad. No:10A Ataşehir İSTANBUL - Turkey
info.tr@estun-europe.eu +90 850 305 45 67
Turkey、Armenia、Georgia、Azerbaijan