Installation Manual

English

SSCU Series



Read and observe installation manual before initial commissioning/initial startup/ integration of the module!

Observe safety instructions!

Keep for future use!

Installation manual for SSCU series devices

Status: 02/2025
Valid as of

Firmware Version **1.0.1.7/1.0.2.7**
Hardware Version **4**

INFORMATION

The Englisch version is the original Version of the installation manual.

- Contact the manufacturer immediately if the instructions are missing!
- Always keep the manual at hand!
- Make sure that the manual is complete!
- Obtain this document only through the original publisher!

Subject to technical changes!

The content of this documentation has been compiled with the most carefulness, and corresponds to our current state of information. Nevertheless, we point out that the technical update of this documentation cannot always be carried out simultaneously with the technical evolution of our products.
Information and specifications can always be changed. For the current version, please refer to www.bbh-products.de.

Manufaturer BBH Products

BBH Products GmbH
Böttgerstraße 40
92637 Weiden
GERMANY

1. Inventories

1.1. Table of contents

1. Inventories 3
1.1. Table of contents 3
1.2. Table of illustrations 8
1.3. List of tables 10
2. Basic information 11
2.1. Identification 11
2.2. Important information for use 11
2.3. Warranty claims 12
2.4. Liability exclusion 12
2.5. Copyright 12
2.6. Brands 12
2.7. Supplied documents 13
2.8. Symbols and signal words 14
2.8.1. Safety information 14
3. Safety 15
3.1. General safety information 16
3.2. Target group 17
3.3. Terms 19
3.4. Relevant standards and directives 20
3.5. Intended use 21
3.6. Storage and transport 22
3.7. Placement 23
3.8. Electrical connection 24
3.9. Behaviour in case of emergencies 25
3.10. Safe status 25
3.11. Scope of delivery SSCU 26
3.12. Labelling / rating plate SSCU 27
4. Use 28
4.1. Device description 28
4.1.1. Function 28
4.1.2. Embedding into the EtherCAT network and into FSoE 29
4.1.2.1. FSoE data transfer 29
4.1.2.2. EtherCAT network 29
4.1.2.3. EtherCAT data transfer 30

4.1.2.4. FSoE and EtherCAT 30
4.1.3. The principle of safe monitoring with SSCU 32
4.2. Operation and service 32

5. General structure of the SSCU assemblies 33
5.1. FSoE Master (SSCU) 33
5.2. Encoder specifications 34
5.3. Scanner specifications 35

6. Technical specifications of the SSCU series.....36
6.1. SSCU Basic units 36
6.1.1. SSCU/1 36
6.1.2. SSCU/1/AX 38
6.2. Additional information 40
6.2.1. Cable lengths 40

7. Connection and installation.....41
7.1. General notes on installation 41
7.2. Installation / mounting 43
7.2.1. Mounting 43
7.2.2. Dismounting 44
7.2.3. Latching mechanism for mounting on standard mounting rail 45
7.3. Wiring 45
7.4. Terminal schemes 46
7.4.1. SSCU/1 46
7.4.2. SSCU/1/AX 48
7.5. External DC 24 V – voltage supply device 51
7.6. Connection of the external encoder supply 53
7.6.1. Incremental, HTL, SIN/COS, SSI 53
7.6.2. Resolver 54
7.7. Connection of digital inputs 55
7.8. Connection of analog inputs 56
7.9. Connection of Serial interface 57
7.10. Connection of position and speed sensors 58
7.10.1. General information 58
7.10.2. Assignment of encoder interface 60
7.10.2.1. Incremental 60
7.10.2.2. HTL 61
7.10.2.3. Sin/Cos 62
7.10.2.4. SSI (Master/Slave Mode) 63
7.10.2.5. Resolver (Listener Mode) 64
7.10.2.1. Analog 65
7.11. Configuration of measuring distances 66
7.11.1. Genreal description of encoder configuration 66

8. Sensor type diagnoses 67
8.1. Absolute encoder: 67
8.2. Incremental encoder: 69
8.3. SinusCosinus encoder – Standard mode 69
8.4. SinusCosinus encoder – High resolution mode: 70
8.5. HTL – Sensor 70
8.6. Resolver 71

9. Reaction time 72
9.1. Response time at standstill: 72
9.2. Response time of FSoE in Fastchannel operation: 75
9.3. Response times for error distance monitoring 76

10. Safety-related characteristics 79
10.1. Internal architecture 79
10.2. Safety related characteristic data and wiring for the connected sensors 81
10.2.1. Digital sensors 81
10.2.1.1. Charakteristics of sensors / input elements 81
10.2.1.2. DC of digital sensors / inputs 82
10.2.1.3. Classification of digital inputs 86
10.2.1.4. Digital inputs I00 … I15 86
10.2.1.5. Exemplary connections of digital sensors 87
10.2.1.6. Single-channel sensor, without cross-shorting test 87
10.2.1.7. Single-channel sensor with cross-shorting test 87
10.2.1.8. Dual-channel sensor without time-out and without cross-shorting 89
10.2.1.9. Dual-channel sensor with time-out and cross-shorting test 91
10.2.1.10. Overview of achievable PL for digital safety inputs 92
10.2.2. Sensors for speed and/or position detection 94
10.2.2.1. General safety related structure of sensor interface for position and/or speed 94
10.2.2.2. General diagnostic measures for encoder interface 95
10.2.2.3. Encodertypen und deren Kombination, Diagnosekenndaten 96
10.2.2.4. Specific diagnostic measures with regard to the encoder type used 99
10.2.2.5. Safety-related switch-off threshold encoder systems for position and speed detection 100
10.2.2.6. Safety-related evaluation of encoder systems, resolvers or their combination 103
10.2.3. Analog sensors 106
10.2.3.1. Exemplary connection of analog sensors 107
10.3. Safety related characteristic data and wiring of the outputs 109
10.3.1. Charakteristic of output elements 109
10.3.2. Diagnoses in the cut-off circuit 111
10.3.2.1. Diagnostic functions 111
10.3.2.2. Overview DC with respect to the chosen diagnostic functions 112

10.3.3. Permissable capacitive and inductive load at safe outputs 113
10.3.4. Digital outputs 114
10.3.4.1. Characteristic data of the basic outputs 114
10.3.4.2. Wiring examples basic outputs 116
10.3.4.3. Single-channel switching relay or semi-conductor output without test 116
10.3.4.4. Single-channel switching relay or semi-conductor output with external switching amplifier and testing 117
10.3.4.5. Single-channel switching relay or semi-conductor output with dual-channel external circuit with testing 119
10.3.4.6. Dual-channel switching relay output with external monitoring - group feedback 121
10.3.4.7. Dual-channel output with relay output and semi-conductor output – external control circuit with monitoring 122
10.3.4.8. Dual-channel output with relay output and external control circuit in PL e 123
10.3.4.9. Dual-channel output with semi-conductor output and external control circuit in PL e 123
10.3.4.10. Wiring of a auxiliary output 124
10.3.4.11. Overview of achievable PL for digital safety outputs 125

11. Commissioning and start....128

11.1. Switch-on sequence 128

11.2. Reset behaviour 129
11.2.1. Types of Reset and triggering events 129
11.2.2. Timing of Reset 129
11.2.3. Reset functions 129

11.3. LED displays 132
11.3.1. LED device 133
11.3.2. LED Ethernet state – EtherCAT, combination of STATUS and Error LED 133
11.3.3. LED Ethernet LINK/LAN - EtherCAT 134
11.3.4. LED input/output state 134
11.3.4.1. LED assignment 134
11.3.5. LED voltage supply 135

11.4. Parametrization 136

11.5. Regular function test 136

11.6. Validation 136
11.6.1. Procedure 137
11.6.2. Configuration report 138
11.6.2.1. Structure of the configuration report 138
11.6.2.2. Creating a configuration report 138
11.6.2.3. Filling in the configuration report 138

12. Safety inspection 140

13. Maintenance....141

14. Failure and troubleshooting 141

15. Replacing an assembly 141

16. Decommissioning / disassembly / disposal 142

17. Setting as EtherCAT Slave with TwinCAT3 143

17.1. Installing the program 143

17.2. Creating a new project / Creating a new EtherCAT network 143

17.3. EoE settings in TwinCAT (EtherCAT settings) 152

18. Information for design, programming, validation and test 154

18.1. Risk analysis 154

18.2. Necessary technical documents 157

18.3. Necessary steps – design, realization and test 158

18.3.1. Specification of the safety requirements 160

18.3.2. Specification of the safety system 162

18.3.3. Software specification 164

18.3.4. Hardware specification 164

18.3.5. Selection of the SRP/CS and selection of the equipment 164

18.3.6. Consideration of systematic failures 165

18.3.7. Fault exclusions 166

18.3.8. Hardware design and software design 167

18.3.8.1. Testing of the hardware design 167

18.3.8.2. Analysis of the circuit diagram 167

18.3.8.3. Iterative test of the achieved safety level 168

18.3.8.4. Verification of the software and parameters 168

18.3.8.5. Validation of the functional scheme against the Instruction List (AWL) and parameters via a validation report 168

18.3.8.6. Execution of system tests / FIT (Fault Injection Test) 168

19. List of abbreviations 169

20. Standards 171

20.1. UL/CSA -Certification 171

20.2. EU directives 171

20.3. CE marking 172

EG/EU-Konformitätserklärung nach Maschinenrichtlinie 2006/42/EG und nach RoHS-Richtline 2011/65/EU 172

1.2. Table of illustrations

Fig. 1: rating plated SSCU/1/AX 27
Fig. 2: Network EtherCAT 30
Fig. 3: example FSoE Netzwerk FSoE 31
Fig. 4: structure of SSCU/1 33
Fig. 5: strucutre of SSCU/1/AX 33
Fig. 6: Mounting of the top-hat rail 43
Fig. 7: Remove the control unit from top-hat rail 44
Fig. 8: Terminal scheme SSCU/1 46
Fig. 9: Terminal scheme SSCU/1/AX 48
Fig. 10: Connection of encoder supply 53
Fig. 11: Connection serial interface 57
Fig. 12: 2-channel architecture 79
Fig. 13: total architecture 79
Fig. 14: Digital sensor 2-channel parallel 81
Fig. 15: Digital sensor 2-channel serial 81
Fig. 16: digital sensor one-channel 82
Fig. 17: Single-Channel sensor, without cross-shorting test 87
Fig. 18: Single-channel sensor with cross-shorting test 87
Fig. 19: dual-channel sensor homogenous without cycling, with positive disconnection 90
Fig. 20: dual-channel input element heterogeneous, without cycling 90
Fig. 21: dual-channel sensor homogenous with clock 91
Fig. 22: dual-channel sensor system with separate signal processing 94
Fig. 23: Sensor system with single-/dual-channel partial system 94
Fig. 24 Course of fault in V-detection 100
Fig. 25: Single-channel switching P-output 116
Fig. 26: Single-channel switching relay output 116
Fig. 27: Single-channel relay output with testing 117
Fig. 28: Single-channel switching outout Qx.y with dual-channel external circuit and monitoring at Ix.y as collective feedback 119
Fig. 29: Single-channel switching output Qx.y with dual-channel external circuit as combination of electro-mechanical element and hydraulic/pneumatic valve and monitoring at two inputs 120
Fig. 30: Two-channel switching relay output with external monitoring – group feedback 121
Fig. 31: Dual-channel output with relay output and semi-conductor output – external control circuit with monitoring 122
Fig. 32: Dual-channel output with relay output – external control circuit in PL e 123
Fig. 33: Dual-channel output with semi-conductor output and external control circuit in PL e 123
Fig. 34 wiring of a notification output 124
Fig. 35: Timing of Reset 129
Fig. 36: Reset function 1 130
Fig. 37: Reset function 2 130
Fig. 38: Reset function 3 131
Fig. 39: starting TwinCAT 144
Fig. 40: TwinCAT – Geräte einfügen [TwinCAT - insert devices] 144
Fig. 41: TwinCAT - Master einfügen [TwinCAT – insert Master] 145
Fig. 42: TwinCAT – SSCU einfügen [TwinCAT - insert SSCU] 145
Fig .43: TwinCAT – IO devices 146
Fig. 44: TwinCAT – IO devices 147
Fig. 45: TwinCAT – setting Slaves 147
Fig. 46: TwinCAT - linking 148
Fig. 47: TwinCAT – insert SDC 149
Fig. 48: TwinCAT - Task 149
Fig. 49: TwinCAT connection 150
Fig. 50: TwinCAT – time parameters 151
Fig. 51: TwinCAT – RUN 151

Fig. 52: TwinCAT – EoE settings 152
Fig. 53: TwinCAT – IP ports 152
Fig. 54: TwinCAT – pinging of the Slaves 153
Fig. 55: TwinCAT + SafePLC2 153
Fig. 56: risk analysis 154
Fig. 57: risk graph according to EN 13849-1 155
Fig. 58: technical documents according to the Machine Directive 157
Fig. 59: V model 158
Fig. 60: safety requirements 162
Fig. 61: Decision path acc. to SISTEMA 163
Fig. 62: Systematic failurese 165

1.3. List of tables

Table 1: reaction time 74
Table 2: calculation of response time without Overspeed 78
Table 3: calculation of response time with Overspeed 78
Table 4: 7-segment display 128
Table 5: types of Reset 129
Table 6: Reset functions 130
Table 7: LED displays, overview 132
Table 8: LED device state 133
Table 9: LED Ethernet state 133
Table 10: LED Ethernet LINK/LAN 134
Table 11: LED input/output state 134
Table 12: Phases of the V model 159
Table 13: Abbreviations 170

2. Basic information

2.1. Identification

Units of SSCU series: **SSCU/1, SSCU1/AX**

Firmware Version: The firmware version is indicated on the device rating plate.

Hardware Version: The hardware version is indicated on the device rating plate.

BBH Products GmbH
Böttgerstraße 40
92637 Weiden

Germany

phone: +49 961 / 4 82 44 0
fax: +49 961 / 4 82 44 33
e-Mail: info@bbh-products.de

2.2. Important information for use

The documentation is part of the product and contains important information on the integration of the module into devices as well as on their operation and service. The programming and parameterization of the devices are described in the programming manual. Their exact knowledge and understanding is a mandatory prerequisite for installation or modification of the device function or device parameters.

The documentation is intended for all persons involved in integration and installation planning and who perform assembly, installation, commissioning and service work on the product.

The documentation must be made available to this group of persons in a legible condition.

Make sure that the persons responsible for planning and integration, plant and operation, as well as persons who work with the modules under their own responsibility, have read and understood the documentation in full.

In case of ambiguities or further information requirements, please contact BBH Products GmbH.

2.3. Warranty claims

Compliance with the following documentation is a prerequisite for trouble-free operation and the fulfillment of any warranty claims. Therefore, read the documentation first before you start planning the integration and/or work with the connected devices from BBH Products GmbH!
Make sure that the documentation is made available in a legible condition to integration and installation planners, employees and persons who carry out assembly, installation, commissioning and service work on the product, to persons responsible for the system and its operation, and to persons who work on the devices under their own responsibility.

2.4. Liability exclusion

Observance of this documentation and the documentation on the connected devices from BBH Products GmbH is a basic prerequisite for safe operation and for achieving the specified product properties and performance characteristics. BBH Products GmbH assumes no liability for personal injury, property damage or financial loss resulting from non-observance of the documentation.
Liability for material defects is excluded in such cases.

2.5. Copyright

© 2023 - BBH Products GmbH. All rights reserved.
This document is subject to German copyright law. Copying, editing, distribution, and every kind of processing outside the limits require the written consent of the respective author, or rather, of the respective creator.

2.6. Brands

The product names mentioned in this documentation are brands or registered trademarks of the respective titleholders.

EtherCAT® is a registered trademark and patented technology, licensed via Beckhoff Automation GmbH, Germany.

Safety over EtherCAT® is a registered trademark and patented technology, licensed via Beckhoff Automation GmbH, Germany.

2.7. Supplied documents

The following documents must be read carefully andmust be considered during installation.

- Programming manual SSCU:
  - ➔ *HB-44810-820-10-xxF-EN SSCU programming manual*
- Error list SSCU series:
  - ➔ *HB-44810-813-02-xxF-EN error list SSCU*
- Validation report (validation according to SafePLC² print):
  - ➔ *Print of programming software*
- Inspection report (TÜV inspection report for type release of the assemblies SSCU/x, etc.):
  - ➔ *Inspection report SSCU series.*
- Manufacturer documentation of the components integrated via the bus, and of the directly integrated components.
  - ➔ *External Documents*

xx = Placeholder for the currently valid version

Always use the latest version of the documentation and software.
In case of ambiguities or further information requirements, contact the publisher directly.
If required, you can also request the documentation in printed form from BBH Products GmbH.

2.8. Symbols and signal words

The following symbols and signal words are used in this documentation. The combination of a pictogram and a signal word classifies the respective safety note. The symbol may vary depending on the type of hazard.

	Symbol	Signal word	Description
Death		**DANGER**	Draws your attention to a dangerous situation that **will** cause death or severe injury if it is not avoided.
Injury + property damage		**WARNING**	Draws your attention to a dangerous situation that **can** cause death or severe injury if it is not avoided
		**CAUTION**	Draws your attention to a dangerous situation that **can** cause minor to moderate injury, if it is not avoided.
Material damage		**ATTENTION**	Draws your attention to possible malfunctions and material damage.
No damage		**NOTICE**	Draws your attention to useful hints and tips that can facilitate handling and operation.
		**SAFETY NOTE**	Draws your attention to the use and the effects of safety information.

2.8.1. Safety information

The safety information applies not only to one specific action, but to several actions within a topic. The pictograms used indicate either a general or specific hazard.

Structure of a safety notice:

SIGNALWORD



Description of the hazard source

Type and danger of the source.

Possible consequences in case of disregard.

3. Safety

The following general safety instructions are intended to prevent personal injury and damage to property. The operator must ensure that the basic safety instructions are observed and complied with.

Make sure that the persons responsible for planning and integration, the persons responsible for the plant and its operation, as well as persons who work on the device under their own responsibility have read and understood the operating instructions completely.

In case of ambiguities or further information requirements, please contact BBH Products.

3.1. General safety information

- Never install, commission or start damaged products. Please complain immediately to transport company about any damage.
- Never open the device housing and / or never carry out modifications arbitrarily. Mortal danger due to the loss of safety functions.
- In case of improper use, incorrect installation or operation, there is a risk of serious personal injury or property damage.
- Further information can be found in the documentation.

DANGER 	Working on the wiring or on the electric system can cause electric shock. Electric shock can cause death or severe injuries due to electric current. Therefore, work on the electric system may only be carried out by qualified persons in according to TRBS 1203. (For qualified persons, knowledge of valid regulations and standards as well as oft he valid accident prevention rules is presumed).
NOTICE	Work may only be carried out after the Installation manual has been read carefully and if the installation manual is strictly observed. The device data (technical data) must be considered.
NOTICE	The content of this Installation manual is restricted to the basic function of the devices. Programming and parametrizing of the devices is described in the Programming manual. Exact knowledge and understanding of programming and parametrization is the prerequisite for the installation and the modification of both, the device function and the device parameters.
NOTICE	The devices may only be started (i. e. the start of an appropriate operation) is only permitted in compliance with the specifications of the EMC Directive. The underlying regulations are the EMC test regulations EN 55011 and EN 61000-5-2.
NOTICE	The valid VDE regulations and other special safety regulations must be observed.
NOTICE	The configured monitoring functions, as well as their parameters and their links must be proved by a validation report.
WARNING 	Inputs and outputs for standard functions, as well as digital data and analogue data transmitted by communication units must not be used for safety-related applications. Data errors can cause failures that can also provoke unexpected start-up of the whole plant.

3.2. Target group

The persons involved in the planning for the integration of the assembly in devices as well as for their use in applications must have sufficient qualifications. This usually consists of a university or technical education for electrical / electronic systems in combination with special knowledge of the laws, regulations, standards and guidelines for the protection of persons and property when dealing with machines and plants.

All installation, commissioning, troubleshooting and maintenance work must be carried out **by a qualified electricia**n (IEC 60364 or CENELEC HD 384 or DIN VDE 0100 and IEC 60664 or DIN VDE 0110 and observe national accident prevention regulations).

Qualified electricians in the sense of these basic safety instructions are persons who are acquainted They must also be conversant with the applicable safety regulations and laws, in particular the requirements of EN ISO 13849-1 and the other standards, directives and laws mentioned in this documentation.

The aforementioned persons must have the authorization explicitly granted by the company to commission, program, parameterize, label and ground devices, systems and circuits in accordance with the standards of safety technology.

All work in the other areas of transport, storage, operation and disposal must be carried out by persons who have been suitably instructed.

The following table explains the competencies of the target groups in detail:

Target group	Requirement and knowledge
project developer	Basic technical education (technical college, engineering education or equivalent work experience). Knowledge of: ▪ the operation of a PLC, ▪ safety regulations, ▪ the application, ▪ Project planning and validation of safety controls, ▪ Project planning of EMC-compliant system structures
Electrician	Specialized electrical training (in accordance with industry training guidelines). Knowledge of: ▪ Safety regulations, ▪ wiring guidelines, ▪ circuit diagrams, ▪ professional making of electrical connections
Commissioning engineer	Basic technical education (university of applied sciences, engineering education or corresponding professional experience). knowledge of: ▪ safety regulations, ▪ the operation of the machine or system, ▪ basic functions of the application, ▪ system analysis and troubleshooting, ▪ the adjustment possibilities on the operating devices. ▪ Validation of safety controls
Service technician	Basic technical education (university of applied sciences, engineering education or corresponding professional experience). Knowledge of: ▪ the operation of a PLC, ▪ safety regulations, ▪ the operation of the machine or plant, ▪ diagnostic possibilities, ▪ systematic error analysis and elimination

3.3. Terms

The SSCU assemblies manufactured by BBH Products GmbH serve to implement safety-relevant functions by safe communication via FSoE and non-safe communication by means of EtherCAT. These are always having a two-channel design: system A and system B.

- The term "**safe**" is used in accordance with the following standards: DIN EN ISO 13849-1, DIN EN 61508-1:2011-02 (cf, the chapter "Relevant standards").
- The term "**Safe function for applications up to PL e or SIL 3**"indicates functions in line with the above standards with appropriate integrity (reliability).
- The term "**non-safe**" refers to functions and data interfaces that do not or not completely fulfill the requirements according to the aforementioned standards.

The system software "**SafePLC²**"serves for programming and configuration of the SSCU-assemblies manufactured by BBHProducts GmbH.

In this document, the abbreviation "**SSCU**" refers to the FSoE Master assemblies SSCU/1 and SSCU/1/AX.

3.4. Relevant standards and directives

The following standards have been considered for development and implementationei der Entwicklung und Umsetzung berücksichtigt:

- DIN EN ISO 13849-1:2016 - Safety of machinery - Safety-related parts of control systems - Part 1: General principles for design
- IEC 61508:2011 Functional safety of electrical/electronic/programmable electronic safety-related systems
- DIN EN ISO 13850:2016 - Safety of machinery - Emergency stop function - Principles for design
- DIN EN 60529:2014 - Degrees of protection provided by enclosures (IP Code)
- DIN EN 62061:2016 - Safety of machinery - Functional safety of safety-related electrical, electronic, programmable electronic control systems
- DIN EN 60204-1:2014-10 - Safety of machinery - Electrical equipment of machines - Part 1: General requirements
- DIN EN 61800-5-2:2017 - Adjustable speed electrical power drive systems - Part 5-2: Safety requirements - Functional.
- DIN EN 574:2008-12 - Safety of machinery - Two-hand control devices - Functional aspects - Principles for design
- DIN EN 55011:2016 - Industrial, scientific and medical equipment – Radio-frequency disturbance characteristics – Limits and methods of measurement
- DIN EN 61000-6-2:2019 Electromagnetic compatibility (EMC) – Part 6-2: Generic standards - Immunity for industrial environments
- DIN EN 60068-2-6:2008-10 Environmental testing – Part 2-6: Tests – Test Fc: Vibration (sinusoidal)
- DIN EN 60068-5-2:2000-08 – Environmental Testing Part 5: Guide to Drafting of Test Methods - Terms and Definitions
- DIN EN ISO 12100:2013-08 – Safety of machinery - basic concepts, general principles for design
- DIN ISO/TR 14121-2 – Safety of machinery — Risk assessment — Part 2**:** Practical guidance and examples of methods

The following directives have been considered for development and implementation of the product:

- 2006/42/EG (Macinery Direcive)
- 2014/35/EU (Low-Voltage Directive)
- 2014/30/EU (EMC Directive)
- 2011/65/EU (RoHS Directive)

3.5. Intended use

The modules of the **SSCU series** are programmable safety controllers for the production of safety functions, safe monitoring and switch-off of drives. The devices are intended for decentralized use in a network:

- in Emergency Stop devices,
- as safety related components according to Machine Directive 2006/42/EG,
- as PES for zur risk reduction according to IEC 61508,
- in safety circuits EN 60204-1 u. EN 60204-32,
- as PES for functional safety according to IEC 62061,
- as SRP/CS according to EN ISO 13849,
- as device for the manufacturing of security devices according to EN 61800-5-2,
- as logic units for signal conversion and for signal processing in two hand controls according to EN 574.

➲ The **SSCU series** may only be used for the applications specified in the technical description and in compliance with the described general technical conditions.

➲ The **SSCU series** may only be operated in conjunction with recommended or approved third-party devices.

➲ The **SSCU series** has been developed, manufactured, tested and documented in compliance with the relevant directives and standards. Therefore, if the described instructions and safety-related notes are observed, the product does not normally present any hazards with regard to damage to property or to the health of persons.

CE

The SSCU assemblies are safety-related components in accordance with appendix IV of the EU directive 2006/42/EG (Machine Directive). They have been developed, engineered and manufactured in accordance with the above directive and the EC directive 2014/30/EU (EMC Directive) – cf. EC Declaration of Conformity in the appendix.

NOTICE

SSCU modules without an UL approval / a CSA approval can be used in the USA and Canada if the following conditions are observed:

➲ The switch voltage of the output relays must be limited to max. 24 V.

➲ For power supply of the SSCU assemblies and of their inputs and their outputs, a power pack must be used. The power pack used must comply with the CLASS 2 requirements according to UL 1310.

Under these conditions, an UL approval / a CSA approval are not necessary, and the SSCU assembly can in be used in switching systems according to UL 508A

WARNING



Proper use of the devices

The use of the above devices contrary to regulations and conditions indicated here can cause death or injury of persons as well as damage to connected devices and connected machinery.

CAUTION



Machinery Directive

The Machinery Directive 2006/42/EC and the EMC Directive 2014/30/EU must be observed during integration and operation!

NOTICE

Warranty

The use of the above devices also results in the loss of any type of warranty claim and of any type of damage claims.

The technical data and the information on connection conditions can be found on the rating plate and in this documentation and must be observed.

3.6. Storage and transport

The assemblies are stored and dispateched in protected boxes. The boxes protect the assemblies against falling and impact.

The information concerning transport, storage and appropriate handling must be observed.

The climatic conditions indicated in the chapter “Technical specifications of the SSCU series” must be observed.

NOTICE

For storage and transport, the conciitions according to EN 60068-2-6 must be observed with respect to the values indicated under “Technical specifications of the SSCU series”.

3.7. Placement

The placement and cooling of the equipment must be selected to ensure ambient and operating conditions in accordance with the following limits and data.
The devices must be protected against any impermissible stress. In particular, no components may be bent and/or insulation distances changed during transport and handling. Touching electronic components and contacts must be avoided.
The safety controllers contain electrostatically sensitive components that can easily be damaged by improper handling. Electrical components must not be mechanically damaged or destroyed (health hazard under certain circumstances!).

WARNING



Intended use

The following areas of application are expressly excluded for the control module:

- Use in areas subject to explosion or fire hazards
- Use in mining
- Use outdoors
- Use in damp rooms or rooms with splash water hazard
- use in environments with highly polluted air
- use in environments with harmful oils, acids, gases, vapors, dusts, radiation, etc.
- the use in non-stationary applications as far as the mechanical limit values can be exceeded.
- Other products must be used for these applications!

The EN ISO 13849-1 standard and other functional safety standards have been taken into account in the engineering of the SSCU series assemblies.

CAUTION



Destruction of the assembly or the control system in case of improper handling!

The assemblies may only be installed and removed with the supply voltage switched off. Otherwise, the assemblies may be destroyed or undefined signal states may cause damage to the control system.

NOTICE

It is requested that all potentially dangerous incidents related to BBH safety technology be reported immediately to BBH.
Furthermore, it is requested that safe products that have failed due to a defect and are considered beyond repair be sent to BBH for analysis.

Liability and warranty of the manufacturer are excluded, if the damages are due to one or more of these causes:

- Improper use of the unit
- Non-observance of standards and guidelines
- Improper starting, operation, maintenance, servicing, and mounting of the unit and of their connections.
- Disregard of the safety information given in this manual
- Unauthorized modifications, design changes or arbitrary technical changes
- Use of unauthorized spare parts and accessory components
- Catastrophes due to external impact and higher force.

3.8. Electrical connection

The applicable national accident prevention regulations (e.g. BGV A3) must be observed when working on live equipment.

The electrical installation must be carried out in accordance with the relevant regulations (e.g. cable cross-sections, fuses, protective conductor connection). Further instructions are contained in the documentation.

Instructions for EMC-compliant installation - such as shielding, grounding, arrangement of filters and routing of cables - can be found in the documentation of the safety module. Compliance with the limit values required by EMC legislation is the responsibility of the manufacturer of the system or machine.

Protective measures and protective devices must comply with the valid regulations (e.g. EN 60204-1).

WARNING



Danger to persons due to electric shock!

- Supply the device exclusively from voltage sources which have protective extra-low voltage (e.g. SELV or PELV according to EN 61131-2).
- If a SELV voltage source is used, it can become PELV due to the design of the module and the connections (earth fault!).
- Protective extra-low voltage circuits must always be safely isolated from circuits with dangerous voltage.

CAUTION



Fire hazard in case of component failure

Provide adequate fuse protection for the 24 V DC power supply of the control system in the end application! (Information on this can be found in the Power supply section).

3.9. Behaviour in case of emergencies

The SSCU units have been developed and built to be able to autonomously recognize failures by means of diagnostics and to autonomously change into the safe status (cf. chapter "Safe status").

CAUTION 	To eliminate wiring errors, the affected block must be de-energized, because short circuits or incorrect tensions can cause failures in the block

DANGER 	Working on the wiring or on the electric system can cause electric shock. Electric shock can cause death or severe injuries due to electric current. Therefore, work on the electric system may only be carried out by persons who are qualified persons according to TRBS 1203.

3.10. Safe status

The safe status of the SSCU unit is:

- All outputs of the group are safely switched off, and the unit is in the error status. The error status remains until its cause has been eliminated and the current error status has been confirmed.
- The status of the unit is permanently shown ong the 7-segment display, if the 7-segment display is supplied with voltage.
- Errors are sequentially displayed by a letter and 4 numbers (cf. Troubleshooting).

3.11. Scope of delivery SSCU

The assemblies of the SSCU series are delivered with the input connectors, the output connectors and the power supply connectors.

The assemblies are enclosed in the product informaton of the SSCU series. Among others, the product information includes the link to download the complete documentation.

INFORMATION	The documentation (installation manual, programming manual) are free available via online download.

INFORMATION	Programming software, dongle (Hard Lock), programming cable, etc. must ordered separately.

3.12. Labelling / rating plate SSCU

The rating plate is mounted on the left sidewall of the assembly, and contains the following information:

- Type = Type designation
- Date: = Manufacture date (week number / year)
- Product No.: = Product number with barcode
- Serial No.: = Serial number with barcode
- HW-Release: = Hardware Release marking
- SW-Release: = Software Release marking
- NORM: = Safety category
- Power = Properties of the voltage supply
- Inputs: = Properties of the inputs
- Outputs: = Properties of the outputs
- MAC-ID: =



Fig. 1: rating plated SSCU/1/AX

4. Use

4.1. Device description

4.1.1. Function

SSCU/1/x (in short: SSCU) are master units for FSoE communication.
SSCU serve to read encoder data and switching states from FSoE Slave units (e. g. SSB, SIO, SDU) and from external FSoE devices to implement safety functions.

To implement safety functions, the SSCU (FSoE Master) can send, receive and process safe data via FSoE and non-safe data via EtherCAT for this purpose. In the transfer layer of the EtherCAT network, the SSCU only functions as Slave and sends data to or receives data from the EtherCAT Master. The FSoE Slaves (e. g. SSB, SIO, SDU) send and receive the data of the axles to be monitored and of the axles' digital imputs and digital outputs in the same way to / from the EtherCAT Master. During the sending process and during the receiving process, the FSoE data (safe) are transmitted in closed data containers. The EtherCAT Master summarizes the FSoE data received by the Slaves, and transfers them to the SSCU (FSoE Master). In the opposite data direction, the EtherCAT Master receives the overall data framework of the FSoE data containers from the SSCU, and distributes the FSoE data containers to the different Slaves.

NOTICE The EtherCAT Master transfers the FSoE data containers unmodified from the FSoE-Slaves to the FSoE-Master and vice versa. Thus, the EtherCAT-Master is only responsible for the correct data transfer. For data transfer, the EtherCAT Master needs all connection information necessary to establish this cross-communication. The information necessary to establish this cross-communication must be provided by the configuration tool of the EtherCAT Master.

The following safety functions are available in the SSCU:

- Safe processing of input signals and of output signals
- Speed monitoring
- Rpm monitoring
- Standstill monitoring
- Direction monitoring
- Safe increment
- Emergency stop monitoring
- Position monitoring
- Position range monitoring
- Multiaxes Position Monitoring
- Monitoring of the history area
- Target Position Monitoring
- Safe Arithmetic Calculation

4.1.2. Embedding into the EtherCAT network and into FSoE

4.1.2.1. FSoE data transfer

FSoE (Fail Safe over EtherCAT) is the safe data transfer via the EtherCAT network.
The application data are bundled into data packages and are additionally supplemented with unique identifications and unique checksums.
Additionally, FSoE is monitored via timer (Watchdog). For each participant, these timers are checked in the network. Thus, an interruption of FSoE can be safely recognized.
The checksum is calculated by means of a CRC16 (16-bit-Cycle-Redundancy-Check) and permits to recognize errors with a residual error probability of $< 10^{-9}$. Thus, FSoE permits safe data transfer up to PL e or SIL 3.

Data package and CRC are transferred together (as one package) via the non-safe EtherCAT network. – Due to the additional calculation effort, the transfer of data package and CRC takes place every 1ms.

4.1.2.2. EtherCAT network

The EtherCAT network consists of one Master and of a determined number of Slaves.
Data transfer takes place via Ethernet connections between the EtherCAT Master and every participant. As a rule, these Ethernet connections are serial connctons from participant to participant. Via these Ethernet connections, Ethernet Frames are sent. First, every network participant must read the received data. Then, it must filter out the data addressed to itim and insert the output data into the Frame. After the Frame has passed all Slaves, it is sent back to the EtherCAT Master.

As thus every participant has influence on the transfer of a message, the network must be exactly deifned, or rather, it must be specified. This specification takes place via the ESI data. The ESI data determne the participants and their properties.

Data transfer is always initiated by the Master. – Data transfer takes place in the EtherCAT network with an optimum transfer time of some µs.

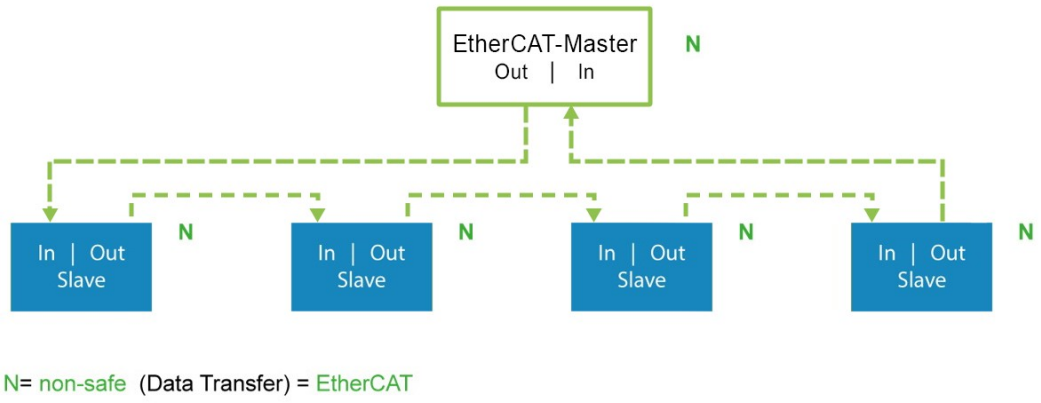

Fig. 2: Network EtherCAT

4.1.2.3. EtherCAT data transfer

Basically, a difference is made between process data that must be transferred cyclically, and acyclic data, e. g. configuration data and diagnostics data.

The cyclical process data are assigned to the PDOs (Process Data Objects). Length and content of the PDOs can be either fixed or variable. The variable content is fixed by PDO mapping. The possibilities of the PDO are fixed by the individual participant description file (ESI file).

Primarily, acyclical data services are SDOs (Service Data Objects), but they can also be EoE (Ethernet over EtherCAT) or FoE (File over EtherCAT). Also here, the possibilities of the acyclic services are fixed by the individual participant description file (ESI file).

4.1.2.4. FSoE and EtherCAT

The Ethernet frame of the EtherCAT network can contain safe data as well as non-safe data. The safe data are called FSoE data and are assigned to the protocol stack of the FSoE Master and the FSoE Slave. FSoE data are transferred cyclically. Thus, they are contained in the PDO of the respective participant.

The SSCU is designed as FSoE Master and starts the safe data transfer via FSoE. Additionally, as EtherCAT Slave, the SSCU is participant in the non-safe EtherCAT network.

A separate Ether CAT Master starts the non-safe data transfer via EtherCAT.

The PDOs with the included FSoE data are transferred cyclically. The cycle time of the data transfer is determined in the configuration of the EtherCAT Master. As a rule, the cycle time of

the data transfer should be set many times shorter than the cycle time of the FSoE Master. Thus, the data update within the Watchdog monitoring time of the Master can be guaranteed.

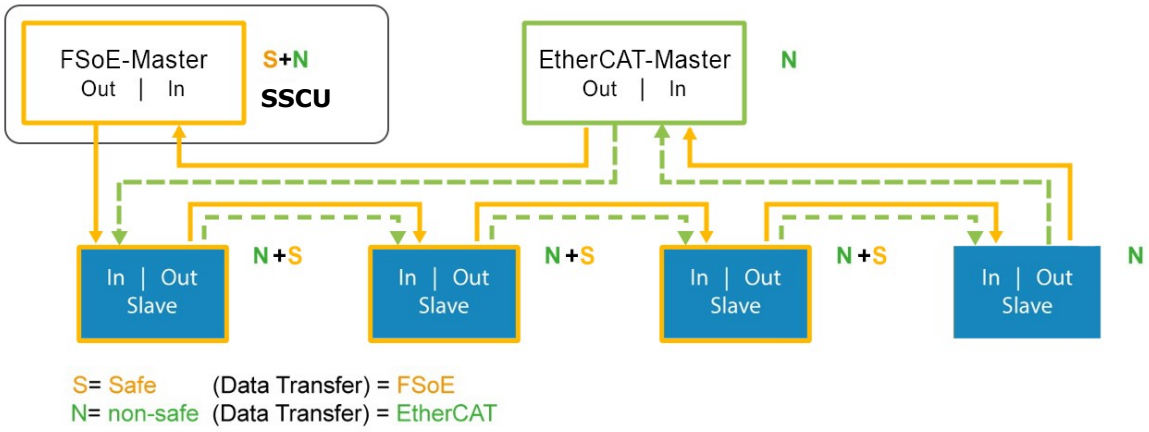

Fig. 3: example FSoE Netzwerk

Among others, the following assemblies are suitable as FSoE:

- SIO = Safe IO Slave assembly by BBH to import IOs
- SENC/SDU = Safe Drive Unit Slave assembly by BBH to import up to 4 axis

Generally, also assemblies by other manufacturers can be integrated, if they offer an FSoE communication.

4.1.3. The principle of safe monitoring with SSCU

The SSCU master assembly receives the data of inputs and axles from the Slave assemblies (e. g. SIO, SDU, SSB by BBH Products or FSoE slaves by other manufacturer) and analyzes the received data.
After data analysis, the SSCU can implement safety functions, and switch outputs accordingly. – This can either happen directly via the outputs of the assemblies or via the outputs of the Slave assemblies.

As the data transfer via EtherCAT happens more frequently (e. g. every 62.5 µs), data can at first be transferred in the non-safe way. Afterwards, they can be transmitted less frequently (every 1 ms). Instead, they can be transferred and used in a safe way. This can be necessary to optimize response times.

4.2. Operation and service

The SSCU assembly is designed for to be used in a protected environment (switch cabinet (cf. technical specifications of the SSCU series).

Before mounting the assembly and before removing the assembly, or before separating signal lines, the assembly must be de-energized. To de-energize the assembly, all live feed lines to the device must be disconnected and checked for absence of voltage.

While the assembly is mounted, and while the assembly is removed, appropriate measures must be taken to avoid electrostatic discharge to the terminals and to the plug connections led to the outside. To avoid electrostatic discharge to the terminals and to the plug connections led to the outside, contact with the terminals should be restricted to a minimum, and before and after the contact, grounding (e. g. by a grounding bracelet) should take place.

5. General structure of the SSCU assemblies

The series SSCU consists of:

- FSoE Mastern (SSCU/1, SSCU/1/AX)
- FSoE Slaves (SSCU AX/1, SSCU IO/1)

5.1. FSoE Master (SSCU)

In general, the SCU assemblies (SSCU/1 and SSCU/1/AX) are structured as follows:

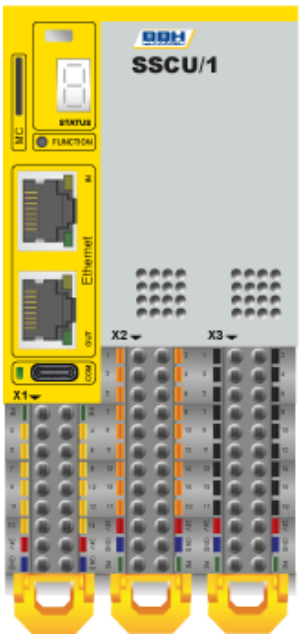

Fig. 4: structure of SSCU/1

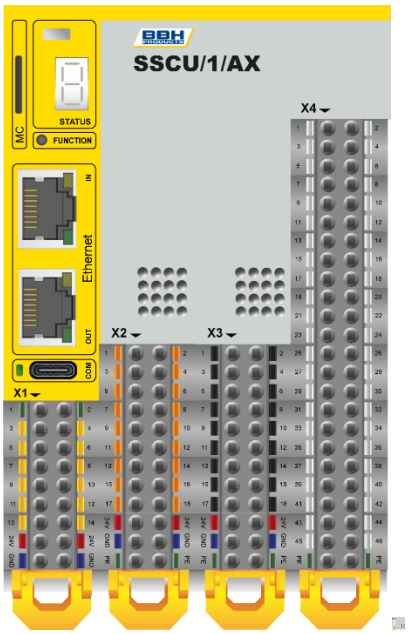

Fig. 5: strucutre of SSCU/1/AX

5.2. Encoder specifications

Incremental encoder - HTL		
	Signal level 24V / 0V	Signal level 24V / 0V
	Physical Layer	PUSH / PULL
	Measuring signal A/B	Track with 90 degree phase difference
	Max. counting pulse (X4/ ENC1-ENC3)	200 kHz
	Type of connection	Plug-in terminals
Incremental encoder - TTL		
	Signal level	5V / 0V
	Physical Layer	RS-422 compatible
	Measuring signal A/B	Track with 90 degree phase difference
	Type of connection	Plug-in terminals with spring connection
	Max. frequency of input cycles (X4/ ENC1, ENC2)	500 kHz
	Phase detection	30° (Max. allowed deviation from the rated value)
Sin/Cos		
	Physical Layer	+/-0,5V_{SS}
	Signal level tolerance	0,7 …. 1,4V_{SS}
	Measuring signal A/B	Track with 90 degree phase difference
	Standard mode	
	Max. frequency of input cycles (X4/ ENC 1, ENC 2)	500 kHz
	High resolution mode (optional)	
	Max. frequency of input cycles (X4)	15 kHz
	Type of connection	Plug-in terminals
SSI encoder		
	Data interface	**S**erial **S**ynchronous **I**nterface (SSI) (SSI) with variable data length of 12 – 28 Bit
	Data format	Binary, Graycode
	Physical Layer	RS-422 compatible
	SSI-Master operation	
	Taktrate (X4/ ENC3, ENC4)	125, 250, 500, 1000, 2000 kHz
Resolver		
	Mode	**Master and slave**
	Signal level	8...20 Vss
	Source frequency master	8 kHz
	Source frequency slave	4..12 kHz
	Standard-mode	
	Max. frequency /poles (X4/ ENC1, ENC2)	500 kHz / 4
	Type of connection	Plug-in terminals

Analog encoder (X4/ ENC2, ENC3)	
Mode	**Master**
Data interface	Analog input with data length of 9 Bit resolution
Data format	N.a
Physical Layer	-10..+10V, 4..20 mA

5.3. Scanner specifications

Hokuyo Scanner supported		
UAM-05LP	Physical Layer	RS-485
	Data interface	UART with safety protocol from Hokuyo
	Max. number of scanner	6

6. Technical specifications of the SSCU series

6.1. SSCU Basic units

6.1.1. SSCU/1

Type designation	*Device design*
	Design of module with the following periphery: 2 Data interfaces, for up to 6 safe scanner units 16 Safe digital inputs 8 Safe digital outputs 2 Pulse outputs 2 Relay outputs 1 Function button 1 7-segment display 1 SD-Card Slot 1 Fieldbus interface 1 Status LED 1 LED for COM 2 LED per Ethernet 16 Status LEDs for inputs 16 Status LEDs for outputs

Characteristics of the module:

- Safe logic processing of input, output, status and activation signals
- Easy and transparent programming and parametrization via SafePLC²
- Scanner master functions, activation of monitoring areas and computing of monitoring result status
- Complete set of Drive monitoring
- Deterministic data communication and processing for safe position und speed functions
- via distributed sensor / multiple axes
- Special AGV functions
- Storage of safe parameters in the base module
- Status LEDs for IO
- Multifunction button (Quit, Start, Reset) front side
- Integrated Communication interface:
  Field bus interface and FSoE-Slave stack for safe connectivity to higher levels of control
- Assembly on top hat rail

Technical characteristic data SSCU/1

Safety related characteristic data			
	Performance level		PL e (EN ISO 13849-1)
	PFH / architecture		$1{,}24*10^{-8}$ (worst case)
	$MTTF_d$		86 Jahre (worst case)
	SIL acc. to IEC 61508		One channel mode: Cat 3 (EN ISO 13849-1) / SIL2 Two channel mode: Cat 4 (EN ISO 13849-1) / SIL3
	Proof test interval		20 years = max. operating period
General data			
	Max. no. of expansion modules		2x Axis or 4x IO
	Interface for expansion modules		2x RJ-45 (Ethernet)
	Number of safe digital inputs		16
	Number of safe digital outputs		2
		pp-switching*	8+4
		pn-switching*	2
	Number of safe relay outputs		2
	Number of safe analog inputs		-
	Number of pulse outputs (clock outputs)		2
	Number of scanner connections (data interface)		6
	Number of encoder interface		-
	Type of connection		Plug-in terminals with spring connection
Electrical data			
	Supply voltage (tolerance)		24 VDC; 2A (-20%, +25%)
	Fuse (should be provided)	Voltage supply device +24 VDC Voltage supply I/O + VDC	min. 32 VDC; max. 2A; min. 32 VDC; max. 10A (4 A in the scope of cULus)[2)]
	Max. power consumption (logic)		
		SSCU/1	4,7 W
	Rated data digital inputs		24 VDC; 20 mA, Typ2 acc. to IEC 61131-2
	Rated data digital outputs		24 VDC; 0,5A
		pn-/pp-switching	24 VDC; 2A
		Pulse outputs (clock outputs)	24 VDC; 250mA
	Rated data relays	Normally open	24 VDC; 2A
	Rated data analogue inputs		-
Environmental data			
	Temperature		-25°C … +55°C operation -25C° … +70C° storage and transport
	Class of protection		IP 20, connectors IP00 EN 60529
	Climatic category		3K24 acc. to DIN EN 60721-3-3
	Pollution class		2, EN 60664-1
	EMC		DIN EN 61800-3, DIN EN 61800-5-1, DIN EN 62061, DIN EN 62477-1, DIN EN 55011
	Shocks		15g/11ms, 10G/16ms and 5G/11ms in all three axes
	Vibration resistance		conforms to EN 60068-2-6 / EN 60068-2-27, IEC 60068-2-64
	Max. appl.height		2000m
Mechanical data			
	Dimensions (HxDxW [mm])		SSCU/1 = 124x95x57
	Weight (g)		SSCU/1 = 326
	Mounting		To snap on top-hat rail
	Min. terminal cross-section /AWG		0,2 mm² / 24
	Max. terminal cross-section /AWG		1,5 mm² / 16

(*) pn/pp are configurable via SafePLC²

2) See Operating permit within the scope of UL/CSA

6.1.2. SSCU/1/AX

Type designation	*Device design*
	Design of module with the following periphery: 2 Data interfaces, for up to 6 safe scanner units 16 Safe digital inputs 8 Safe digital outputs 2 Pulse outputs 2 Relay outputs 1 Function button 1 7-segment display 1 SD-Card Slot 1 Fieldbus interface 4 Encoder interfaces 1 Status LED 1 LED for COM 2 LED per Ethernet 16 Status LEDs for inputs 16 Status LEDs for outputs

Characteristics of the module:

- Safe logic processing of input, output, status and activation signals
- Easy and transparent programming and parametrization via SafePLC²
- Scanner master functions, activation of monitoring areas and computing of monitoring result status
- Complete set of Drive monitoring
- Deterministic data communication and processing for safe position und speed functions via distributed sensor / multiple axes
- Special AGV functions
- Storage of safe parameters in the base module
- Status LEDs for I/O
- Multifunction button (Quit, Start, Reset) front side
- Integrated Communication interface:
  Field bus interface and FSoE-Slave stack for safe connectivity to higher levels of control
- Assembly on top hat rail

Technical characteristic data SSCU/1/AX

Safety related characteristic data			
	Performance level		PL e (EN ISO 13849-1)
	PFH / architecture		2,08*10^{-8} (worst case)
	$MTTF_d$		49 Jahre
	SIL acc. to IEC 61508		One channel mode: Cat 3 (EN ISO 13849-1) / SIL2 Two channel mode: Cat 4 (EN ISO 13849-1) / SIL3
	Proof test interval		20 years = max. operating period
General data			
	Max. no. of expansion modules		2x Axis or 4x IO
	Interface for expansion modules		2x RJ-45 (Ethernet)
	Number of safe digital inputs		16
	Number of safe digital outputs		2
		pp-switching* pn-switching*	8+4 2
	Number of safe relay outputs		2
	Number of safe analog inputs		2
	Number of pulse outputs (clock outputs)		2
	Number of scanner connections (data interface)		6
	Number of encoder interface		4 (8x 6 pins)**
	Type of connection		Plug-in terminals with spring connection
Electrical data			
	Supply voltage (tolerance)		24 VDC; 2A (-20%, +25%)
	Fuse (should be provided)	Voltage supply device +24 VDC Voltage supply I/O + VDC	min. 32 VDC; max. 2A; min. 32 VDC; max. 10A (4 A in the scope of cULus)[2)]
	Max. power consumption (logic)		
		SSCU/1/AX	4,7 W
	Rated data digital inputs		24 VDC; 20 mA, Typ2 acc. to IEC 61131-2
	Rated data digital outputs		24 VDC; 0,5A
		pn-/pp-switching	24 VDC; 2A
		Pulse outputs (clock outputs)	24 VDC; 250mA
	Rated data relays	Normally open	24 VDC; 2A
	Rated data analogue inputs		-10..+10V, 4..20mA
Environmental data			
	Temperature		-25°C … +55°C operation -25C° … +70C° storage and transport
	Class of protection		IP 20, connectors IP00 EN 60529
	Climatic category		3k24 acc. to DIN EN 60721-3-3
	Pollution class		2, EN 60664-1
	EMC		DIN EN 61800-3, DIN EN 61800-5-1, DIN EN 62061, DIN EN 62477-1, DIN EN 55011
	Shocks		15g/11ms, 10G/16ms and 5G/11ms in all three axes
	Vibration resistance		conforms to EN 60068-2-6 / EN 60068-2-27, IEC 60068-2-64
	Max. appl.height		2000m
Mechanical data			
	Dimensions (HxDxW [mm])		SSCU/1/AX = 124x95x76
	Weight (g)		SSCU/1/AX = 413
	Mounting		To snap on top-hat rail
	Min. terminal cross-section /AWG		0,2 mm² / 24
	Max. terminal cross-section /AWG		1,5 mm² / 16

(*) pn/pp are configurable via SafePLC²

2) See Operating permit within the scope of UL/CSA

6.2. Additional information

6.2.1. Cable lengths

EtherCAT IN	< 100m
EtherCAT OUT	< 100m
Digital inputs	< 30m, <100 m *)
Digital outputs (type1, type2, message, pulses)	< 30m
Relay outputs	< 30m
USB	< 3m
Encoder	< 30m
Scanner	< 20m

Note

*): Use of screened cables. Unscreened cables can be used under the following restrictions

- Not to be laid within switch cabinets
  - No parallel cable routing. Cables must be laid far from interferrence sources (motor cables, power wires, engine brakes etc.
- How to be laid outside the switch cabinet
  - Electric wires separated by separators in metal cable ducts
  - Cable arrangement in metallic tube
  - Cable arrangement separated from power wires with a distance of > 10cm, rectangular intersections

7. Connection and installation

7.1. General notes on installation

Strictly follow the safety regulations when installing!

Protection class IP20

Route all signal lines for the interfacing of digital inputs and contact monitoring separately. You should in any case disconnect 230VAC (*120VAC cULus*) voltages from low voltage power lines,
if these voltages are used in connection with the application.

The cable lengths for digital inputs and outputs and all sensorik must normally not exceed **30 m**.

If the cable lengths exceed **30 m** you must apply appropriate measures for fault exclusion concerning impermissible overvoltage. Appropriate measures include e.g. lightning protection for outdoor lines, overvoltage protection of the indoor system, protected routing of cables.

Only cULus:

The maximum cable length of **30 m** shall not be exceeded.

Measures concerning the electromagnetic compatibility (EMC)

The SSCU is intended for use in the drive environment and meets the EMC-requirements mentioned above.
It is also assumed that the electromagnetic compatibility of the overall system is ensured by application of appropriate measures.

⚠**SAFETY NOTE**:

- Electric power supply lines of the SSCU and "discontinuous-action lines" of the power converter must be isolated from each other.
- Signal lines and power lines of the power converter must be routed through separate cable ducts. The distance between the cable ducts should be minimum 10 mm.
- Only shielded cables must be used to connect the position and speed sensors. The signal transmission cable must be RS-485-standard compliant (lines twisted in pairs).
- Care must be taken to ensure that the shielding is correctly connected to PE.
- The shielding on the sensor side must comply with appropriate methods.
- Care must be taken to ensure EMC-compliant installation of the power converter technology in the vicinity of the SSCU module. Special attention should be paid to the cable routing and the processing of the shielding for the motor cable and

the connection of the braking resistor. The installation guidelines of the converter manufacturer must be observed.

- All contactors in the environment of the power converter must be equipped with appropriate suppressor circuits.
- Suitable measures must be taken to protect against overvoltages.

Symbols used according to UL 61010-1

 Symbol 14

- The temperature at the connection terminals can exceed 60°C. Suitable cable types must be used above this temperature.

7.2. Installation / mounting

NOTICE

Spare parts or consumables

For the SSCU assembly no spare parts or consumables are available. If need be, the assembly must be exchanged altogether. Opening or disassembling the SSCU assembly is not permitted.

NOTICE

Mounting location

The SSCU assembly is exclusively installed in switch cabinets that at least meet the requirements of protection category IP54.

The assemblies must be mounted vertically on a top-hat rail.

NOTICE

Air circulation

The vent slots must be kept sufficiently clear to warrant air circulation within the assembly.

7.2.1. Mounting

The SSCUs are mounted on standard C rails by means of a snap-on latch.

The SSCU are inserted into the rail diagonally from above and then snap in in the bottom part.

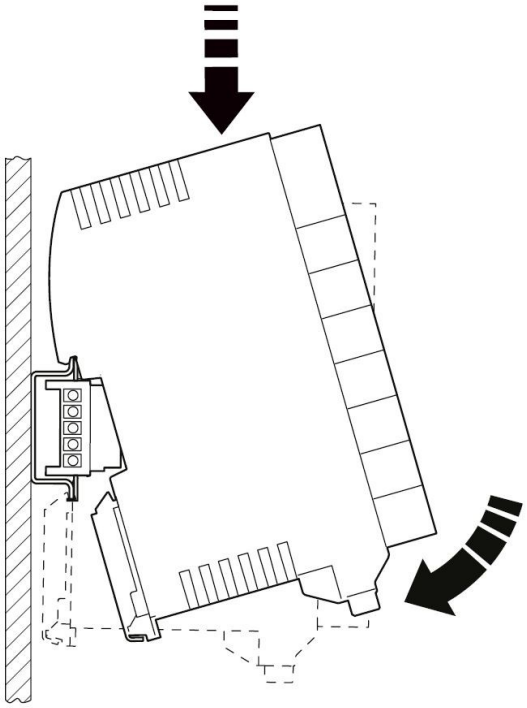

Fig. 6: Mounting of the top-hat rail

ATTENTION

Mounting

Do not pull or insert the rail bus connector under load.

- Place the device from above on a grounded
  35 mm mounting rail. For this, hook the upper housing groove onto the upper edge of the mounting rail.
- Carefully push the device by the housing head in the direction of the mounting surface.
- After the snap-in foot has audibly snapped into place on the mounting rail check that it is firmly seated.

7.2.2. Dismounting

WARNING



Electrocution

Destruction oft he compnent as well as the device by disassembly under voltage.

Disconnect the device and its components from the power supply before mounting or dismounting!

To remove the SSCU device in a deenergized state, proceed as described below:

1. Release the terminal connectors using the lock-and-release system (see A in the following figure).
2. For disassembly, a screwdriver that is inserted into the slot of the latch that is led out at the bottom. Afterwards, the screwdriver is moved upward. (see B) The connectors are lifted and the contact is released.
3. Remove the SSCU device perpendicular to the mounting rail. (see C)

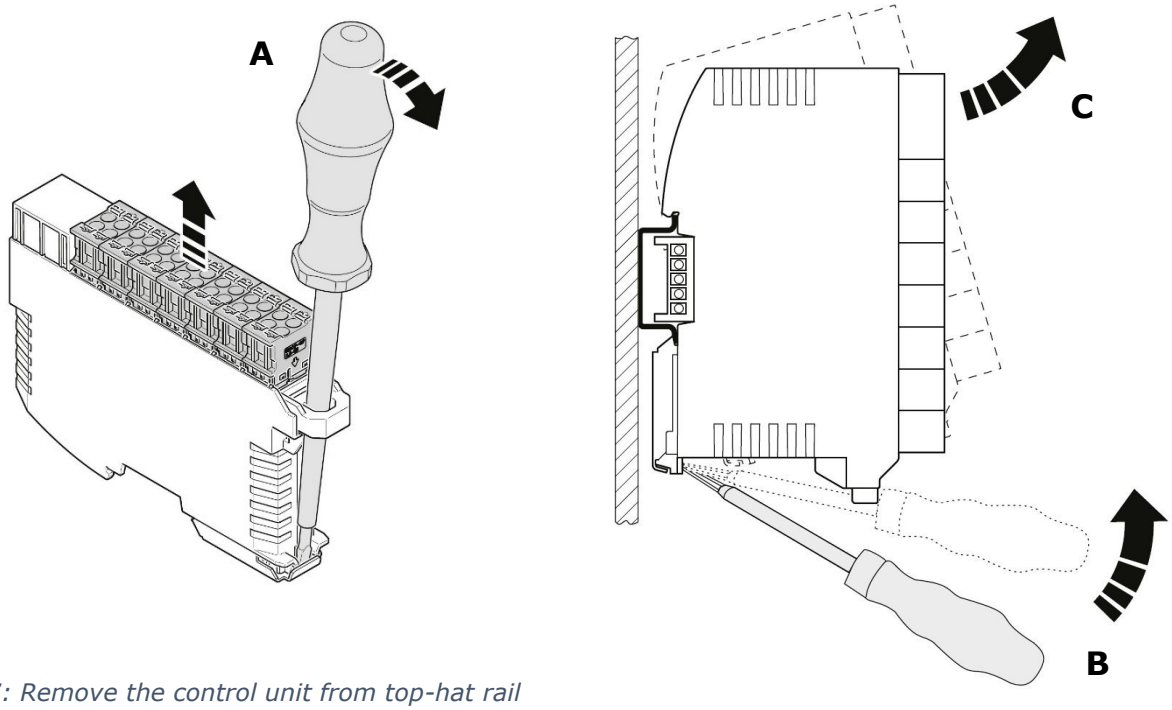

Fig. 7: Remove the control unit from top-hat rail

7.2.3. Latching mechanism for mounting on standard mounting rail

The assembly is mounted with several latching mechanisms.

Control unit	Quantity
SSCU/1	1
SSCU/1/AX	2

7.3. Wiring

DANGER



Work on the wiring or work at the electrical system can cause electric shock. Electric shock can cause death. Thus, only persons qualified according to TRBS 1203 may carry out work on the wiring or work on the electrical system.

Wiring of the SSCU is carried out according to the terminal connection table (cf. above). First, the cables of the digital inputs and the cables of the digital outputs and the power supply cables (24 VDC and 0 VDC) must be connected to the respective terminals.

DANGER



The SSCU may only be supplied by voltage sources with protective low voltage (e. g. SELV or PELV according to EN 61131-2)
If an SELV voltage source is used, it can become a PELV due to the design of both the assembly and the connections.
Protective low voltage circuits must always be installed in a way that they are safely insulated from power circuits with dangerous voltage.
If power supply units are used, it must be guaranteed that in case of failures the maximum voltage is 60 V. The real behaviour of the power supply unit used must be inquired at the manufacturer of the respective power supply unit because according to EN 60950 in case of failure 120 V are permitted.

NOTICE

Please observer the technical data. Faulty voltage levels can damage the block and other network components.

After the power supply cables (see above) have been connected to the respective terminals, the two network cables of the EtherCAT network are connected.
To connect the two network cables, one input connector and one output connector (mains plugs) are available / are supplied.

NOTICE

The necessary cables are not included in the scope of delivery of the SSCU and must be acquired separately.



7.4. Terminal schemes

7.4.1. SSCU/1

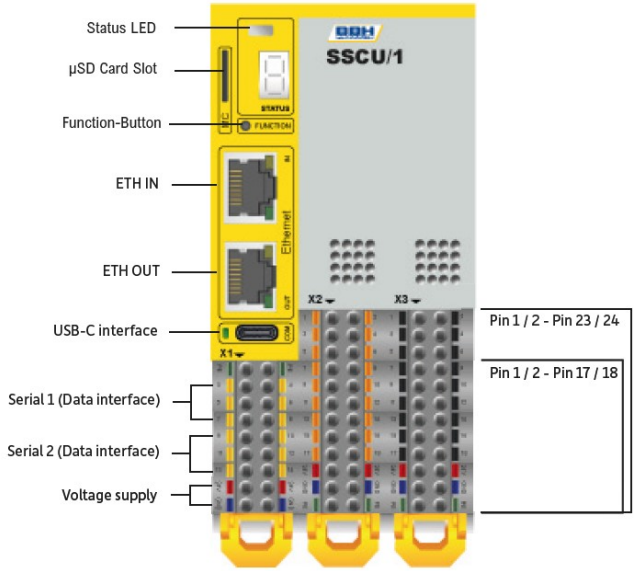

Fig. 8: Terminal scheme SSCU/1

X1 Serial Data interface			
Terminal	Pin	Pin	Description
X1.1	1 – PE	2 – PE	Protective earth
	3 – UART_1+	4 – UART_1-	Serial Interface 1
	5 – UART_1+	6 – UART_1-	
X1.2	7 – UART_1+	8 – UART_1-	Serial Interface 1
	9 – UART_2+	10 – UART_2-	Serial Interface 2
	11 – UART_2+	12 – UART_2-	
X1.3	13 – UART_2+	14 – UART_2-	Serial Interface 2
	15 – VCC_IN	16 – VCC_OUT	Voltage supply scanner +24 VDC
	17 – GND	18 – GND	Voltage supply 0 VDC

X2			
Terminal	Pin	Pin	Description
X2.1	1 – NC	2 – NC	Safe digital inputs
	3 – I0.0	4 – I0.8	
	5 – I0.1	6 – I0.9	
X2.2	7 – I0.2	8 – I0.10	Safe digital inputs
	9 – I0.3	10 – I0.11	
	11 – I0.4	12 – I0.12	
X2.3	13 – I0.5	14 – I0.13	Safe digital inputs
	15 – I0.6	16 – I0.14	
	17 – I0.7	18 – I0.15	
X2.4	19 – VCC_IN	20 – VCC_IN	Voltage supply device +24 VDC
	21 – GND	22 –GND	Voltage supply device 0 VDC
	23 – PE	24 – PE	Protective earth

X3				
Terminal	Pin	Description	Pin	Description
X3.1	1 – Q0.0	Safe digital outputs	2 – P1 / Q0.6	Non-safe pulse output / Safe digital output
	3 – Q0.1		4 – P2 / Q0.7	Non-safe pulse output / Safe digital output
	5 – Q0.2		6 – Q0.8_PP / Q0.8_P	safe output pn-/pp switching 00
X3.2	7 – Q0.3	Safe digital outputs	8 – Q0.9_PP / Q0.9_N	safe output pn-/pp switching 01
	9 – Q0.4		10 – Q0.10_PP / Q0.10_P	safe output pn-/pp switching 02
	11 – Q0.5		12 – Q0.11_PP / Q0.11_N	safe output pn-/pp switching 03
X3.3	13 – Q0.12_R1.1	Relay Output 1	14 – Q0.12_R1.2	Relay Output 1
	15 – NC	No function	16 – NC	No function
	17 – Q0.14_R2.1	Relay Output 2	18 – Q0.14_R2.2	Relay Output 2
X3.4	19 – VCC_IN	Voltage supply IO +24 VDC	20 – VCC_IN	Voltage supply IO +24 VDC
	21 – GND	Voltage supply IO 0 VDC	22 –GND	Voltage supply IO 0 VDC
	23 – PE	Protective earth	24 – PE	Protective earth

7.4.2. SSCU/1/AX

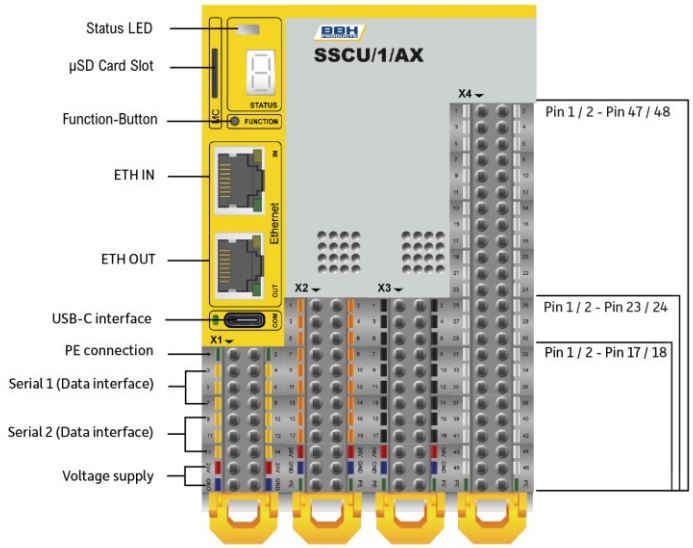

Fig. 9: Terminal scheme SSCU/1/AX

X1 Serial Data interface			
Terminal	Pin	Pin	Description
X1.1	1 – PE	2 – PE	Protective earth
	3 – UART_1+	4 – UART_1-	Serial Interface 1
	5 – UART_1+	6 – UART_1-	
X1.2	7 – UART_1+	8 – UART_1-	Serial Interface 1
	9 – UART_2+	10 – UART_2-	Serial Interface 2
	11 – UART_2+	12 – UART_2-	
X1.3	13 – UART_2+	14 – UART_2-	Serial Interface 2
	15 – VCC_IN	16 – VCC_OUT	Voltage supply scanner 24+ VDC
	17 – GND	18 – GND	Voltage supply 0 VDC

X2			
Terminal	Pin	Pin	Description
X2.1	1 – NC	2 – NC	Safe digital inputs
	3 – I0.0	4 – I0.8	
	5 – I0.1	6 – I0.9	
X2.2	7 – I0.2	8 – I0.10	Safe digital inputs
	9 – I0.3	10 – I0.11	
	11 – I0.4	12 – I0.12	
X2.3	13 – I0.5	14 – I0.13	Safe digital inputs
	15 – I0.6	16 – I0.14	
	17 – I0.7	18 – I0.15	
X2.4	19 – VCC_IN	20 – VCC_IN	Voltage supply device +24 VDC
	21 – GND	22 –GND	Voltage supply device 0 VDC
	23 – PE	24 – PE	Protective earth

X3				
Terminal	Pin	Description	Pin	Description
X3.1	1 – Q0.0	Safe digital outputs	2 – P1 / Q0.6	Non-safe pulse output / Safe digital output
	3 – Q0.1		4 – P2 / Q0.7	Non-safe pulse output / Safe digital output
	5 – Q0.2		6 – Q0.8_PP / Q0.8_P	safe output pn-/pp switching 00
X3.2	7 – Q0.3	Safe digital outputs	8 – Q0.9_PP / Q0.9_N	safe output pn-/pp switching 01
	9 – Q0.4		10 – Q0.10_PP / Q0.10_P	safe output pn-/pp switching 02
	11 – Q0.5		12 – Q0.11_PP / Q0.11_N	safe output pn-/pp switching 03
X3.3	13 – Q0.12_R1.1	Relay Output 1	14 – Q0.12_R1.2	Relay Output 1
	15 – NC	No function	16 – NC	No function
	17 – Q0.14_R2.1	Relay Output 2	18 – Q0.14_R2.2	Relay Output 2
X3.4	19 – VCC_IN	Voltage supply IO +24 VDC	20 – VCC_IN	Voltage supply IO +24 VDC
	21 – GND	Voltage supply IO 0 VDC	22 –GND	Voltage supply IO 0 VDC
	23 – PE	Protective earth	24 – PE	Protective earth

X4			
Terminal	Pin	Pin	Description
Encoder 1			
X4.1	1 – ENC1_Data + | NCA+	2 – ENC1_Data - | NCA-	TTL/HTL, SinCos, Resolver
	3 – ENC1_CLK + | NCB+	4 – ENC1_CLK - | NCB-	
	5 – ENC1_Z +	6 – ENC1_Z -	
X4.2	7 – ENC1_U_Out +	8 – ENC1_U_Out -	TTL/HTL, SinCos, Resolver
	9 – ENC1_U_In +	10 – ENC1_U_In -	
	11 – NC	12 – NC	
Encoder 2			
X4.3	13 – ENC2_Data +	14 – ENC2_Data -	TTL/HTL, SinCos, Resolver,Analog
	15 – ENC2_CLK +	16 – ENC2_CLK -	
	17 – ENC2_Z +	18 – ENC2_Z -	
X4.4	19 – ENC2_U_Out+	20 – ENC2_U_Out -	TTL/HTL, SinCos, Analog
	21 – ENC2_U_In +	22 – ENC2_U_In -	
	23 – Analog_IN1 +	24 – Analog_IN1 -	
Encoder 3			
X4.5	25 – Analog_IN2 +	26 – Analog_IN2 -	TTL/HTL, SSI, Analog
	27 – ENC3_Data +	28 – ENC3_Data -	
	29 – ENC3_CLK +	30 – ENC3_CLK -	
X4.6	31 – ENC3_Z +	32 – ENC3_Z -	TTL/HTL, SSI, Analog
	33 – ENC3_U_Out +	34 – ENC3_U_Out -	
	35 – ENC3_U_In +	36 – ENC3_U_In -	

Encoder 4			
X4.7	37 – ENC4_Data +	38 – ENC4_Data -	SSI
	39 – ENC4_CLK +	40 – ENC4_CLK -	
	41 – ENC4_Z +	42 – ENC4_Z -	
X4.8	43 – ENC4_U_Out +	44 – ENC4_U_Out -	SSI
	45 – ENC4_U_In +	46 – ENC4_U_In -	
	47 – PE	48 – PE	Protective earth

7.5. External DC 24 V – voltage supply device

The SSCU module requires a 24 VDC power supply (see SELV or PELV, EN50178). The following boundary conditions must be observed during project planning and installation of the intended power supply unit:

Observe the minimum and maximum tolerance of the supply voltage.

Nominal voltage	DC 24 V
Minimum: 24 VDC – 29%	DC 17,0 V
Maximum: 24 VDC + 30%	DC 31,2 V

To achieve the lowest possible residual ripple of the supply voltage, the use of a 3-phase power supply unit or an electronically controlled unit is recommended. The power supply unit must meet the requirements of EN61000-4-11 (voltage dip). The design of the connecting cables must comply with local regulations. The external voltage resistance of the SSCU module is DC 32 V (protected by suppressor diodes at the input).

SAFETY NOTICE



The SSCU module must be individually protected by a 2A (min. 32 VDC) back-up fuse which must be placed near by the terminals of the modules.
Recommended fuse type:
2A circuit breaker (Class B) or safety fuse (inert).

Note:
Reliable galvanic isolation from the AC 230 V (120 VAC cULus) or AC 400 V network must be guaranteed in any case. For this purpose, power supply units must be selected which comply with the regulations DIN VDE 0551, EN 60 742 and DIN VDE 0160. In addition to

the selection of the suitable device, potential equalization between PE and DC 0-V on the secondary side must be ensured.

SAFETY NOTICE



All GND connections of the devices, which are connected to the inputs of the SSCU module must be connected to the GND (voltage supply).

Inputs of the SSCU are:

- Digital inputs
- Digital I/Os
- Analog inputs
- Encoder connections

7.6. Connection of the external encoder supply

7.6.1. Incremental, HTL, SIN/COS, SSI

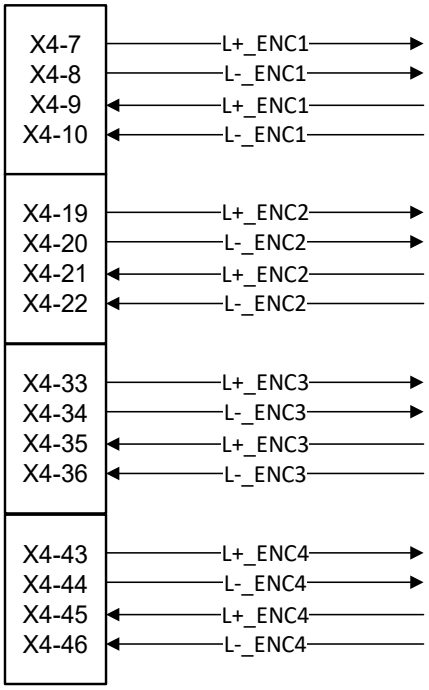

Fig. 10: Connection of encoder supply

The SSCU module supports encoder voltages of 5 V, 8 V, 10 V, 12 V, 20 V and 24 V, that are monitored internally according to the selected configuration in SafePLC².
If an encoder system is not supplied via the SSCU module, it must be ensured that the GND of the encoder is connected to the GND of the SSCU module. The encoder supply must be protected with a fuse of max. 2A.

SAFETY NOTE



- The GND connection of the encoder must be connected to the GND of the SSCU.

Monitoring of the supply voltage in accordance with the chosen nominal voltage:

Nominal voltage	Minimum voltage	Maximum voltage
5 V DC	4,4 V DC	5,6 V DC
8 V DC	7 V DC	9 V DC
10 V DC	8 V DC	12 V DC
12 V DC	10 V DC	14 V DC
20 V DC	16 V DC	24 V DC
24 V DC	20 V DC	29,5 V DC

7.6.2. Resolver

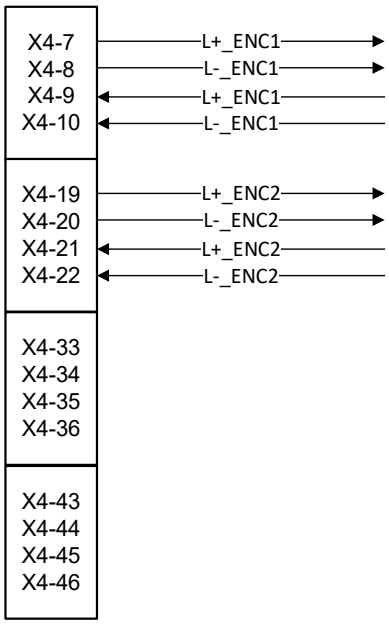

When using resolvers in Master-Mode an additional 24V DC power supply is required for generating the reference signal

NOTICE

- The encoder supply must be protected with a fuse of max. 2A.

Supply voltage monitoring:

Nominal voltage	Minimum voltage	Maximum voltage
24 V DC	20 V DC	29 V DC

7.7. Connection of digital inputs

The SSCU modules comes with safe digital inputs. These are suitable for connecting single or two-channel signals with and without cycling, or without cross-shorting test.

The connected signals must have a "High"-level of DC 24 V (DC +15 V… + DC +30 V) and a "Low"-level of (DC -3 V... DC +5 V, Type1 acc. to IEC 61131-2). The inputs are provided with internal input filters.

A device internal diagnostic function cyclically tests the correct function of the inputs including the input filters. A detected fault will set the module into an alarm status. At the same time all outputs of the module are rendered passive.

Besides the actual signal inputs, the SSCU series hold two clock outputs T1 and T2 available. The clock outputs are switching-type 24 VDC outputs.
The clock outputs are solely intended for monitoring external switching elements and cannot be used for any other function within the application. This monitoring can only be used in conjunction with the safe digital inputs. Not with the safe digital I/Os that may be present.

The switching frequency is 125 Hz for each output. In the planning stage one must bear in mind that the outputs may only be loaded with a total current of max. 250 mA.

Furthermore, approved OSSD-outputs can be connected to safe digital inputs I00- I15 without limitation.

In case of single-channel use of the inputs, the achievable safety level must be limited to SIL 2 or PL d, if the safety function is demanded at regular intervals.

A safety related use of the inputs is generally only intended in connection with the clock outputs.

If clock outputs are not used, short circuits in the external wiring between different inputs and against the supply voltage for the SSCU must be ruled out by external measures, appropriate routing of cables in particular.

Each input can be configured individually fort he following signal sources:

Input is assigned to the cycle P1 (T1)
Input is assigned to the cycle P2 (T2)
Input assigned to continous voltage DC 24 V

7.8. Connection of analog inputs

With the executions with analog processing. max. 2 analog signals to be processed safely:

The analog inputs can be connected as follows:

	min	max.
voltage	-10 V DC	+10 V DC

NOTICE

- The modules can optionally be equipped with voltage and, or current inputs.

SAFETY NOTE



- The GND connection AIN must be connected to the GND of the SSCU.

7.9. Connection of Serial interface

There are two serial interfaces for connection of max. 6 Hokuyo scanners.
On each interface max. 3 scanners can be connected.

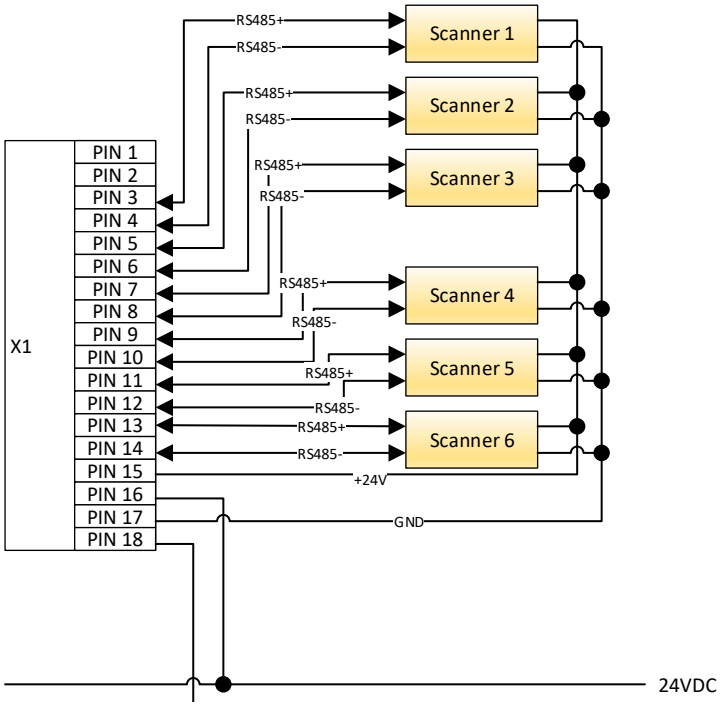

Fig. 11: Connection serial interface

DANGER



- The user has to be ensured that the scanners are connected to the correct interface.

7.10. Connection of position and speed sensors

7.10.1. General information

Depending on module type the device has external encoder interfaces for the connection of industrial incremental and absolute encoders. The encoder interfaces can be configured as incremental, SIN/COS, or as absolute SSI-encoders.
It is also possible to connect 2 incremental signal generating sensors (e.g. proximity switches) to the counting inputs of the SDU module. The signals must each be read in with normal and complementary track.

IMPORTANT:
The voltage supply of the encoder system uses the dedicated terminals on the slave module. This voltage is applied to the encoder plug and monitored by an internal diagnostic process.
When the sensor is supplied with an external voltage, this voltage must be supplied through the encoder plug. The corresponding terminal (encoder supply voltage) on the slave module remains unoccupied.

If an external sensor voltage supply is not recirculated through the encoder plug, any failure of this supply must be included in the fault examination of the overall system. This, in particular, requires evidence that this fault is detected or can be excluded when the specified operating voltage of the overall system is fallen short of / exceeded.

EMC - measures such as shielding etc. must be observed.
The two encoders must be non-interacting to each other. This applies for both the electrical as well as the mechanical part.
If both encoders are coupled to the facility to be monitored via common mechanical parts, the connection must be positively designed and should not have any parts that are susceptible to wear (chains, toothed belts, etc.). Should this be the case, additional monitoring features for the mechanical connection of the sensors (e.g. monitoring of a toothed belt) are required). In case of an active position processing at least one absolute value encoder must be used.

When using two equivalent sensors one must make sure that the sensor with the higher resolution is configured as sensor 1 (process sensor) and the sensor with the lower resolution as sensor 2 (reference sensor).

SAFETY NOTE 	• The GND connections of the encoders must be connected to the GND of the slave module. This applies in the same way also to resolvers.

ATTENTION	• The sensor connections must neither be plugged on nor pulled off during operation. This could cause damage to electrical components of the encoder. • Always de-energize connected encoders and the slave module **before** plugging on or pulling off encoder connections. • With externally supplied encoders, pay attention to switching off the external supply voltage (e.g. converter). • Lines twisted in pairs for signal transmission acc. to RS485 standard must be used for data and clock signals or track A and track B. The wire cross-section must in each individual case be chosen in compliance with the current consumption of the encoder and the cable length required for the installation.

The following applies when using absolute encoders:

In Slave-mode the clock signal is generated by an external process and is read in by the SSCU module together with the data signal. This type of reading causes a beat which results in a reading fault of the following magnitude:

F = (reading time of encoder by external system [ms] / 4 [ms]) * 100 %

The size of the resulting reading fault F must be taken into account when determining the thresholds in the applied monitoring functions, because this fault cannot be compensated!

7.10.2. Assignment of encoder interface

7.10.2.1. Incremental

X4		
Pin	Pin	ENC1
1 – A+	2 – A-	
3 – B+	4 – B-	
5 – Z +	6 – Z -	
7 – U_Out +	8 – U_Out -	
9 – U_In +	10 – U_In -	
11 – NC	12 – NC	
13 – A+	14 – A-	ENC2
15 – B+	16 – B-	
17 – Z+	18 – Z-	
19 – U_Out+	20 – U_Out -	
21 – U_In +	22 – U_In -	
23 – NC	24 – NC	
25 – NC	26 – NC	ENC3
27 – A +	28 – A -	
29 – B +	30 – B -	
31 – Z +	32 – Z -	
33 – U_Out +	34 – U_Out -	
35 – U_In +	36 – U_In -	
37 – A +	38 – A -	ENC4
39 – B +	40 – B -	
41 – Z +	42 – Z -	
43 – U_Out +	44 – U_Out -	
45 – U_In +	46 – U_In -	
47 – PE	48 – PE	

7.10.2.2. HTL

X4		
Pin	Pin	ENC1
1 – A+	2 – A-	
3 – B+	4 – B-	
5 – Z +	6 – Z -	
7 – U_Out +	8 – U_Out -	
9 – U_In +	10 – U_In -	
11 – NC	12 – NC	
13 – A+	14 – A-	ENC2
15 – B+	16 – B-	
17 – Z+	18 – Z-	
19 – U_Out+	20 – U_Out -	
21 – U_In +	22 – U_In -	
23 – NC	24 – NC	
25 – NC	26 – NC	ENC3
27 – A +	28 – A -	
29 – B +	30 – B -	
31 – Z +	32 – Z -	
33 – U_Out +	34 – U_Out -	
35 – U_In +	36 – U_In -	
37 – A +	38 – A -	ENC4
39 – B +	40 – B -	
41 – Z +	42 – Z -	
43 – U_Out +	44 – U_Out -	
45 – U_In +	46 – U_In -	
47 – PE	48 – PE	

7.10.2.3. Sin/Cos

X4		
Pin	Pin	ENC1
1 – SIN+	2 – SIN-	
3 – COS+	4 – COS-	
5 – NC	6 – NC	
7 – U_Out +	8 – U_Out -	
9 – U_In +	10 – U_In -	
11 – NC	12 – NC	
13 – SIN+	14 – SIN-	ENC2
15 – COS+	16 – COS-	
17 – NC	18 – NC	
19 – U_Out+	20 – U_Out -	
21 – U_In +	22 – U_In -	
23 – NC	24 – NC	
25 – NC	26 – NC	ENC3
27 – SIN +	28 – SIN -	
29 – COS +	30 – COS -	
31 – NC	32 – NC	
33 – U_Out +	34 – U_Out -	
35 – U_In +	36 – U_In -	
37 – SIN +	38 – SIN -	ENC4
39 – COS +	40 – COS -	
41 – NC	42 – NC	
43 – U_Out +	44 – U_Out -	
45 – U_In +	46 – U_In -	
47 – PE	48 – PE	

7.10.2.4. SSI (Master/Slave Mode)

X4		
Pin	Pin	ENC1
1 – DATA+	2 – DATA-	
3 – CLK+	4 – CLK-	
5 – NC	6 – NC	
7 – U_Out +	8 – U_Out -	
9 – U_In +	10 – U_In -	
11 – NC	12 – NC	
13 – DATA+	14 – DATA-	ENC2
15 – CLK+	16 – CLK-	
17 – NC	18 – NC	
19 – U_Out+	20 – U_Out -	
21 – U_In +	22 – U_In -	
23 – NC	24 – NC	
25 – NC	26 – NC	ENC3
27 – DATA +	28 – DATA -	
29 – CLK +	30 – CLK -	
31 – NC	32 – NC	
33 – U_Out +	34 – U_Out -	
35 – U_In +	36 – U_In -	
37 – DATA +	38 – DATA -	ENC4
39 – CLK +	40 – CLK -	
41 – NC	42 – NC	
43 – U_Out +	44 – U_Out -	
45 – U_In +	46 – U_In -	
47 – PE	48 – PE	

7.10.2.5. Resolver (Listener Mode)

X4		
Pin	Pin	ENC1
1 – SIN+	2 – SIN-	
3 – COS+	4 – COS-	
5 – NC	6 – NC	
7 – U_Out +	8 – U_Out -	
9 – REF+	10 – REF-	
11 – NC	12 – NC	
13 – SIN+	14 – SIN-	ENC2
15 – COS+	16 – COS-	
17 – NC	18 – NC	
19 – U_Out+	20 – U_Out -	
21 – REF+	22 – REF-	
23 – NC	24 – NC	
25 – NC	26 – NC	ENC3
27 – NC	28 – NC	
29 – NC	30 – NC	
31 – NC	32 – NC	
33 – NC	34 – NC	
35 – NC	36 – NC	
37 – NC	38 – NC	ENC4
39 – NC	40 – NC	
41 – NC	42 – NC	
43 – NC	44 – NC	
45 – NC	46 – NC	
47 – PE	48 – PE	

7.10.2.1. Analog

X4		
Pin	Pin	ENC1
1 – NC	2 – NC	
3 – NC	4 – NC	
5 – NC	6 – NC	
7 – NC	8 – NC	
9 – NC	10 – NC	
11 – NC	12 – NC	
13 – NC	14 – NC	ENC2
15 – NC	16 – NC	
17 – NC	18 – NC	
19 – NC	20 – NC	
21 – NC	22 – NC	
23 – AIN1+	24 – AIN1-	
25 – AIN2+	26 – AIN2-	ENC3
27 – NC	28 – NC	
29 – NC	30 – NC	
31 – NC	32 – NC	
33 – NC	34 – NC	
35 – AIN3+	36 – AIN3-	
37 – NC	38 – NC	ENC4
39 – NC	40 – NC	
41 – NC	42 – NC	
43 – NC	44 – NC	
45 – AIN4+	46 – AIN4-	
47 – PE	48 – PE	

7.11. Configuration of measuring distances

7.11.1. Genreal description of encoder configuration

The most important input variables for the monitoring functions of the module are safe position, speed and acceleration. These are obtained by dual-channel generation from the connected sensor system. A category 4 compliant architecture, i.e. continuous dual-channel recording with high degree of diagnostic coverage, is required for Pl e acc. to EN ISO 13849-1. For possible single-channel components (e.g. mechanical connection of the sensors/encoders with only one shaft/fastening) fault exclusions acc. to EN ISO 13849-2 may be used, if this should be necessary. For Pl d acc. to EN ISO 13849-1 one may work with a reduced degree or diagnostic coverage. Simple design sensor systems (speed monitoring only) may under certain circumstances be sufficient under due consideration of the permissible fault exclusions acc. to EN ISO 13849-2.

Further configuration is described in the programming manual

8. Sensor type diagnoses

Absolute encoder and incremental measuring systems are possible, as well as counting pulse generating proximity switches.

8.1. Absolute encoder:

Data interface: Serial Synchron Interface (SSI) with variable data length from 12 to 28 bit.
Data format: Binary or Gray code,
Physical Layer: RS-422 compatible

SSI-Master operation:
Clock rate: 150kHz

SSI-Listener operation (Slave mode): Max. external clock rate 350 kHz.
Min. clock pause time 150 µsec
Max. clock pause time 1 msec

Diagnoses:

Diagnosis	Parameters	Fault threshold
Supply voltage monitoring	Fixed values 5 V, 8 V, 10 V, 12 V, 20 V, 24 V	+/- 20% +/-2% (measuring tolerance)
Monitoring of differential level on input	Fixed value RS 485-level	+/- 20% +/-2% (measuring tolerance)
Monitoring of Clk-frequency	Fixed value	100 kHz < f < 350 kHz
Plausibility of speed versus position	Fixed value	DP < 2 * V * T with T = 4 ms

Parameterization of SSI-format:

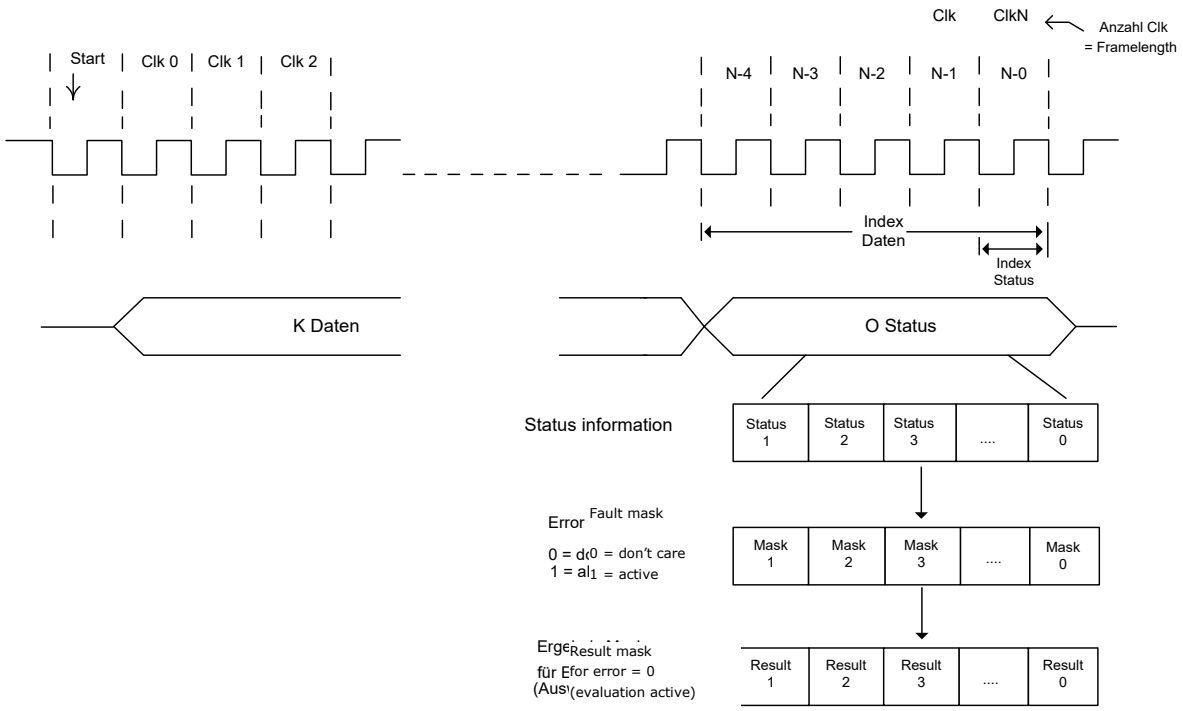

Example:

SSI-Frame Length: 28 cycles
Data-Length: 22 bit
Status: 5-bit, 3-bit Fault + 2-bit Warning/ready for operation

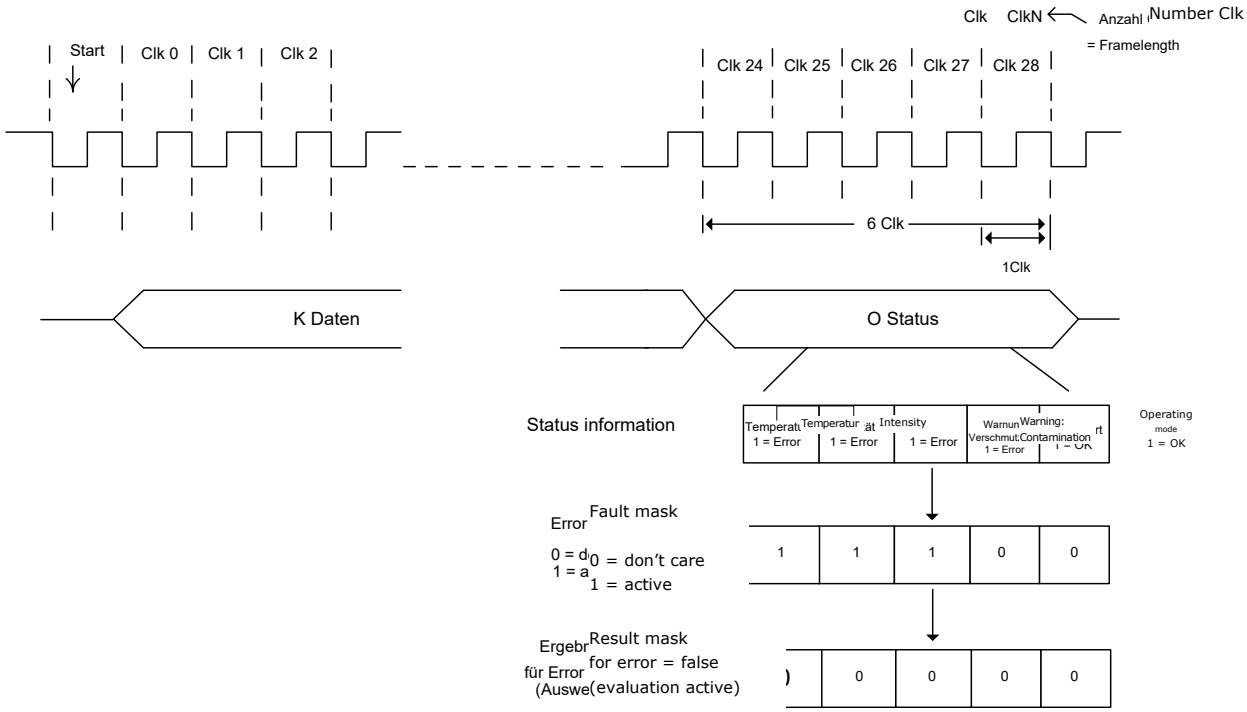

8.2. Incremental encoder:

Physical Layer: RS-422 compatible
Measuring signal A/B: Track with 90-degree phase difference
Maximum frequency of input cycles: 500 kHz

Diagnoses:

Diagnosis	Parameters	Fault threshold
Supply voltage monitoring	Fixed values 5 V, 8 V, 10 V, 12 V, 20 V, 24 V	+/- 20% +/-2% (measuring tolerance)
Monitoring of differential level on input	Fixed value RS 485-level	+/- 20% +/-2% (measuring tolerance)
Monitoring of the counting signal separated for each track A/B	Fixed value	DP > 4 Increments

8.3. SinusCosinus encoder – Standard mode

Physical Layer: +/- 0.5 Vss (without voltage offset)
Measuring signal A/B: Track with 90-degree phase difference
Maximum frequency of input clock pulses: 500 kHz

Diagnoses:

Diagnosis	Parameters	Fault threshold
Supply voltage monitoring	Fixed value 5 V, 8 V, 10 V, 12 V, 20 V, 24 V	+/- 20% +/-2% (measuring tolerance)
Monitoring of amplitude SIN^2+COS^2	Fixed value $1V_{SS}$	65% von 1 V_{SS} +/- 2,5% (measuring tolerance)
Monitoring of phases A/B	Fiexed value 90°	+/- 30° +/-5° (measuring tolerance)

8.4. SinusCosinus encoder – High resolution mode:

Physical Layer: +/- 0.5 Vss (without voltage offset)
Measuring signal A/B: Track with 90 degree phase difference
Maximum frequency of input clock pulses: 15 kHz

Diagnosen:

Diagnosis	Parameters	Fault threshold
Supply voltage monitoring	Fixed values 5 V, 8V, 10V, 12V, 20V, 24V	+/- 20 % +/-2 % (measuring tolerance)
Monitoring of amplitude SIN^2+COS^2	Fixed value $1V_{SS}$	65 % of 1 V_{SS} +/- 2.5 % (measuring tolerance)
Monitoring of phases A/B	Fixed value 90°	+/- 30° +/-5° (measuring tolerance)
Monitoring of counting signal / signal phase quadrant	Fixed value	+/- 45°

8.5. HTL – Sensor

Signal level: 24V/0V
Physical Layer: Push/Pull
Measuring signal A/B: track with 90° phase difference
Max. counting clock frequency: (only SDU12, SDU-22) 200 kHz at X27/28 or X29/30

Diagnoses:

Diagnosis	Parameters	Fault threshold
Supply voltage monitoring	Fixed values 5 V, 8V, 10V, 12V, 20V, 24V	+/- 20 % +/-2 % (measuring tolerance)
Monitoring of differential level on input	Fixed value 24 V	+/- 20 % +/-2 % (measuring tolerance)
Monitoring of the counting signal separated for each track A/B	Fixed value	DP > 4 increments

8.6. Resolver

Measuring signal: SIN/COS – track with 90° phase difference
Max. counting clock frequency: 2 kHz/ pole
Resolution: 9 bit / pole

Slave-Mode
Frequency reference signal: 4 - 16 kHz
Reference signal form: Sinusoidal, triangle, rectangle

[1)]on Enc 1.1/Enc 2.1
[2)]on Enc1.2/ Enc 2.2

Diagnoses:

Diagnosis	Parameters	Fault threshold
Monitoring of ratio	2:1, 3:2, 4:1 (parameterizable)	+/- 20 % +/-2 % (measuring tolerance)
Monitoring of signal amplitude	(Depending on the ratio)	Min: 3.8 Vss +/-5 % (measuring tolerance) Max: 8 Vss +/-5 % (measuring tolerance)
Monitoring of phases A/B	Fixed value 90°	+/- 7° +/-2° (measuring tolerance)
Monitoring of reference frequency	4 kHz to 16 kHz (parameterizable)	+/- 20% +/-5% (measuring tolerance)
Form of reference signal	Sinusoidal, triangle, rectangle, no monitoring (parameterizable)	40 % form deviation
Monitoring of counting signal / signal phase quadrant	Fixed value	+/- 45°

Note: A strong deviation of the input voltage curve from the sinusoidal shape can possibly lead to an early triggering of the diagnosis.

9. Reaction time

The reaction period is an important safety feature. The reaction time must be considered for every application / for every applicative safety function. The following chapter lists the reaction periods for particular functions. If need be, the reaction periods are listed in relation to other parameters. If this information is not sufficient for a specific application, the actual time behaviour must be validated against the target behaviour by means of separate measurements. This concerns especially the use of filtering functions.

DANGER



Significant impairment of safety with incorrectly determined reaction times

- The reaction times for every applicative safety function must be determined in nominal behaviour and must then be compared with the actual value. For this comparison the information given below must be used.
- Particular care must be taken when using filter function. Depending on filter length / filter time, the reaction period can be considerably longer. This prolongation of the reaction time must be considered during the safety relevated design.
- In case of particularly critical problem formulations the temporal behaviour must be validated by means of measurements.
- During start-up of the device / alarm reset or error reset the outputs may (depending on the application program) become active over the response time period. This must be taken into consideration when planning the safety function.
- When using safe field bus connections, (FSoE), the system run-time (watchdog) must be included.

9.1. Response time at standstill:

Reaction periods are calculated on the basis of the cycle time of the **SSCU** system. During operation, the cycle time of the SSCU system is **T_cycle = 4 ms, 8ms, 12ms and 16ms**. The indicated reaction periods correspond to the respective maximum runtime for the specific application within the SSCU block.

Depending on the application, further application independent response times of the sensors and actuators used must be added.

Function	Reaction time [ms]		Explanation
	Typical	Worst-case	
Activation of digital output via digital input	T_cycle* 2 + Tout	T_cycle*2 + Tout	Activation of one input, logic processing and switching of the output
Activation of relay output via digital input	T_cycle* 2 + TRel(A)	T_cycle*2 + TRel(A)	Activation of one input and switching oft he output
Deactivaton of digital output via digital input	T_cycle* 2 + Tout	T_cycle*2 + Tout	Deactivation of one input and thus deactivation of the output
Deactivation output relay via digital inputs	T_cycle* 2 + TRel(D)	T_cycle*2 + TRel(D)	Deactivation of one input and thus deactivation of the relay output
Activation of digital output via input at FSoE Slave	**2* T_{WDFSoE}**[1)]	**2* T_{WDFSoE}**[1)]	Activation of one input at one FSoE Slave. Logic processing and switching of the local output at SSCU/HSC
Activation of output relay via digital input at FSoE Slave	**2* T_{WDFSoE}**[1)]	**2* T_{WDFSoE}**[1)]	Activation of one input and switching of the output
Deactivation of digital output via digital input at FSoE Slave	**2* T_{WDFSoE}**[1)]	**2* T_{WDFSoE}**[1)]	Deactivation of one input and thus deactivation of the output
Deactivation of relay output via digital input at FSoE Slave	**2* T_{WDFSoE}**[1)]	**2* T_{WDFSoE}**[1)]	Deactivation of one input and thus deactivation of the relay output
Reaction of an already activated **monitoring function** including PLC edit in case of position processing and speed processing via digital output	T_cycle* 2[2)]	12[2)]	If the monitoring function that has already been activated by ENABLE, the block needs <u>one</u> cycle to calculate the current speed value. In the next cycle, after the monitoring function has been calculated, the information is processed and edited via the PLC. That means, according to the implemented logic this leads e. g. to the switching of one output.
Calculation SARC	T_cycle	T_cycle	Calculation SARC blocks within one cycle
Virtual Axis	T_cycle* 2[2)]	T_cycle* 2[2)]	Calculation of virtual axis in SARC for using in monitoring function
Error reaction time SARC	T_cycle* 2	T_cycle* 2	Reaction time SARC calculation in case of error

Function	Reaction time [ms]		Explanation
	Typical	Worst-case	
Error response time, static test of digital outputs at Quality1	T_ cycle *2	T_ cycle *2	No filter time during the static test
Error response time, static test of digital outputs at Quality2	T_ cycle *3	T_ cycle *3	Filter time + 1 cycle for the static test
Error response time, static test of digital outputs at Quality3	T_ cycle *4	T_ cycle *4	Filter time + 2 cycles for the static test
Error response time, static test of digital outputs at Quality4	T_ cycle *5	T_ cycle *5	Filter time + 3 cycles for the static test
Error response time, static test of digital outputs at Quality5	T_ cycle *6	T_ cycle *6	Filter time + 4 cycles for the static test
Error response time, dynamic test digital outputs	135* T_ cycle	135* T_ cycle	Error response time stuck at HIGH when output is activated
Tout		2ms	
TRel(A)(D)		(A)12ms (D)14ms	

Table 1: reaction time

NOTICE

- 1): T_{WDFSoE}= configurable FSoE Watchdog time
- 2): If a mean value filter is used, its reaction period must be added.

9.2. Response time of FSoE in Fastchannel operation:

The basis of the calculation of response times of the Fastchannel connection is the Fast Chanel processing time + transmission time EtherCAT.

Fast Channel processing time: **$T_{FCcycle}$ = 2 ms**.
Transmission time: **$T_{transmission}$ = 4 ms**.

The Fastchannel response time on the side of the SSCU is **2*(T_FCcycle + T_transmission).**

To this the Response time of the Slave block is added.
Response $time_{max}$ = 2* response $time_{Slave}$ + 2*($T_{FCcycle}$ + $T_{transmission}$)

Fort he worst case treatment, the Watchdog time of the FSoE connection must be included.
Response $time_{WorstCase}$ = 2* $T_{Watchdog}$ + response $time_{Output}$

Response $time_{Output}$: response time of the output at the corresponding Slave

NOTICE

- In the functional scheme the Fastchannel plan can be linked to the standard plan. If the Fastchannel plan is linked to the standard plan, the response time of the standard plan must also be considered.

9.3. Response times for error distance monitoring

The following calculation scheme results for the calculation of the WorstCase conditions:

System's speed at the time of scanning	V(t)
System's speed at the reaction of the SSCU:	V_{A1} = without filter
	V_{A2} = with filter
Threshold value ($t_{threshold\ value}$ for monitoring SLS or SCA):	V_S = constant for all t
Parameterized filter value:	X_F = constant for all t
Maximum possible acceleration of the application:	a_F = constant for all t
Delay after shutdown:	a_V = constant for all t
Scanning time for occurrence of a WorstCase event:	T_{error}
Response time of the SSCU system:	t_{react}
Response time of the SSCU system:	t_{filter}

For WorstCase consideration, it is assumed that at first the drive moves exactly on the parametrized threshold V_0 at a speed V(s), and that afterwards it accelerates at the maximum possible value a_F.

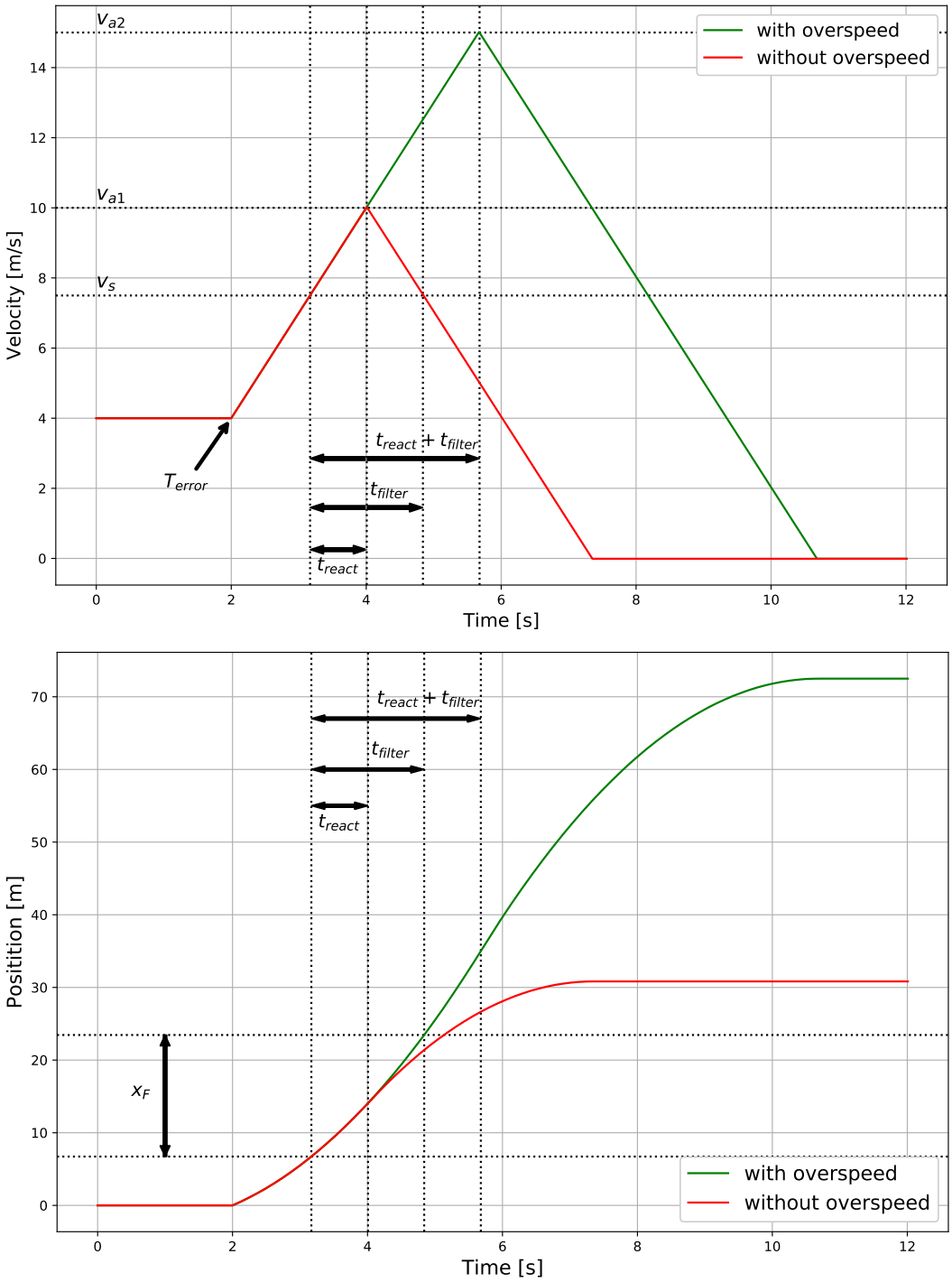

Diagramm 1: Drive response with / without overspeed distance

The following applies for the courses of **V** and **s** the following relations result **without** Overspeed distance:

Parameters	Method of calculation	Remark
t_{Reakt}	Value from information about response time SSCU + Deceleration time in external disabling string	Deceleration time in external disabling string from information by relay manufacturer / contactor manufacturer / brake manufacturer etc.
a_F, a_V	Not specified	Estimation from application
V_{a1}	$= V_S + a_F * t_{react}$	

Table 2: calculation of response time without Overspeed

The following applies for the courses of **V** and **s with** Overspeed distance:

Parameters	Method of calculation	Remark
t_{react}	Value from information about response time SSCU + deceleration time in external disabling string	Deceleration time in external disabling string from information by relay manufacturer / contactor manufacturer / brake manufacturer etc.
a_F, a_V	not specified	Estimation from application
V_{a2}	$= a_F * t_{react} + (V_S^2 + 2 * a_F * X_F)^{1/2}$	

Table 3: calculation of response time with Overspeed

NOTE



The effect of the filter is that the set speed threshold V_a is pushed upward by a value **delta_v_filter [ΔV_{Filter}]**. For the application, the new values for the response time ($T_{react} = T_{scu} + T_{filter}$), as well as the speed resulting thereof must be considered when switching off by the SSCU.

V with Overspeed Distance [m/s]

V without Overspeed Distance [m/s]

10. Safety-related characteristics

10.1. Internal architecture

The internal structure of the SSCU units follows category 4 according to EN 13849-1:
Two separate channels with mutual comparison of results.
Additionally, high-grade diagnostics are carried out for error recognition.

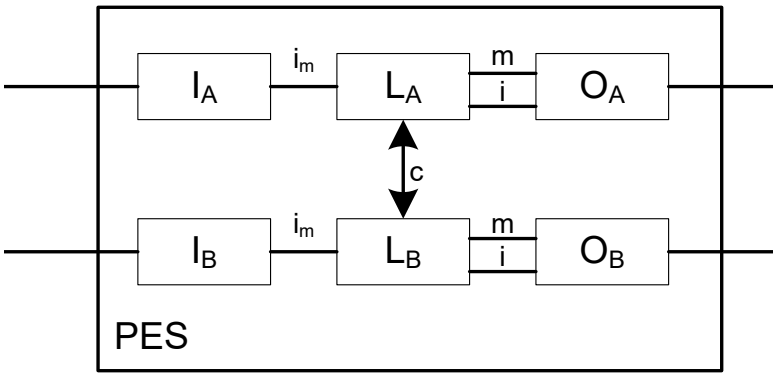

Fig. 12: 2-channel architecture

Thus, the total architecture shows the following structure:

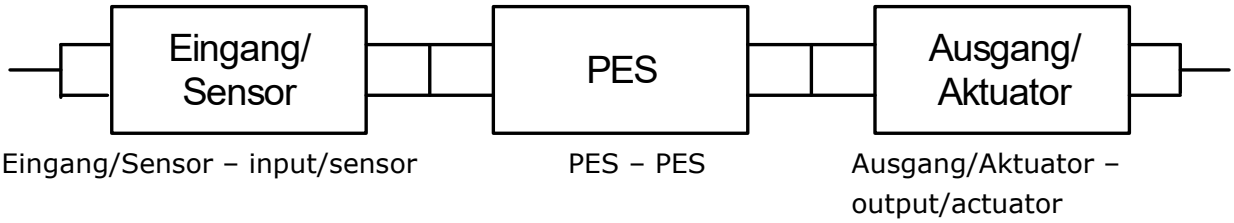

Fig. 13: total architecture

Double import of every input and diagnostics by cross-comparison

The specific safety-related characteristics must be taken from the technical characteristics indicated in chapter 6.

For the safety-related evaluation of complete systems, for the subsystem PES the identification data indicated in chapter 3 can be used (e. g. PL e and PFH value according to table for proof according to EN ISO 13849-1)

Safety-related characteristic data:

Max. achievable safety class	SIL 3 according to IEC 61508 Category 4 according to EN ISO 13849-1 Performance level e according to EN ISO 13849-1	
System structure	2-channel with diagnostics (1002) according to IEC 61508, Architecture category 4 according to EN ISO 13849-1	
Design of the operating mode	„high demand" according to IEC 61508 (high demand rate)	
Probability of a dangerous failure per hour (PFH value) **Specific values according to "Safety characteristics" tables**	SSCU/1	PFH= $1{,}24*10^{-8}$
	SSCU//AX	PFH = $2{,}08*10^{-8}$
Proof test interval (IEC 61508)	20 years, after that the assembly must be replaced	

SAFETY-NOTICE



- The specific safety related characteristic data of the corresponding module can be taken from the technical characteristic data in chapter 6.
- When using several sensors with different functions (e.g. position indicator access door + speed detection) for a safety function (e.g. safe reduced speed when access door is open), these must be assumed as being connected in series for the safety related assessment of the overall system. See also exemplary calculation in appendix.
- The safety regulations and EMC-directives must be strictly followed.
- Concerning the applicable fault exclusions please refer to the tables under D in the appendix of EN 13849-2.
- The characteristic data specified in chapter 6 for the partial system PES (e.g. PL e and PFH-value acc. to table as evidence acc. to EN ISO 13849) can be used for the safety related assessment of the overall system.

The following examples and their characteristic architecture are mainly responsible for the assignment to a category acc. to EN ISO 13849-1.

The maximum possible Performance Levels acc. to EN ISO 13849-1 resulting from this still depend on the following factors of the external components:

- Structure (simple or redundant)
- Detection of common cause faults (CCF)
- Degree of diagnostic coverage on request (DC_{avg})
- Mean time to dangerous failure of a channel ($MTTF_d$)

10.2. Safety related characteristic data and wiring for the connected sensors

Each SSCU unit has completely separated signal processing paths for every safety input. This applies for both the digital and the analog inputs. Furthermore, measures for achieving the highest possible DC-values have been implemented.

10.2.1. Digital sensors

Digital inputs and outputs are generally of a completely redundant design, except the electro-magnetic input terminal. The following list contains details for classification, the DC and the achievable PI or SIL.

10.2.1.1. Charakteristics of sensors / input elements

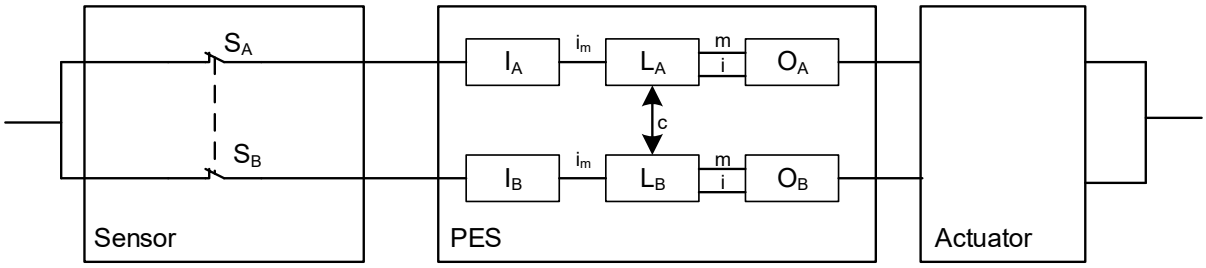

Fig. 14: Digital sensor 2-channel parallel

Two-channel input element in parallel connection (cat. 4, fault tolerance 1) with high DC due to signal processing in two channels and diagnostics by means of cross comparison in the PES.

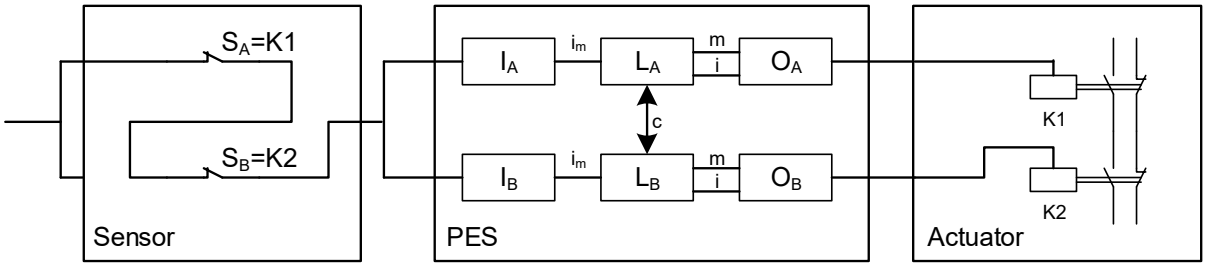

Fig. 15: Digital sensor 2-channel serial

Two-channel input element in serial connection (cat. 4, fault tolerance 1) with low to medium DC due to signal processing in two channels and diagnostics by means of cyclical testing.

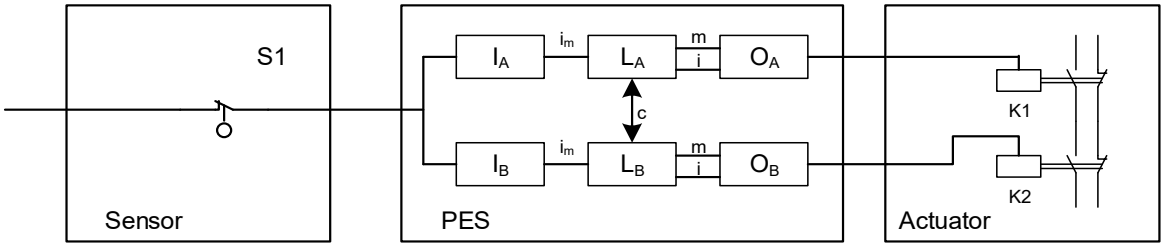

Fig. 16: digital sensor one-channel

One-channel input element and two-channel processing at low to medium DC due to two-channel signal processing and diagnostics by means of cyclical testing. PL / SIL dependent on permissible fault exclusions and on the test rate of input element.

10.2.1.2. DC of digital sensors / inputs

The SSCU modules ensure far reaching diagnostics functions for the input element. These are carried out permanently or optionally (cross-shorting monitoring by means of pulse identifier, cross comparison, 2- or multi-channel sensor with/without time-out, start-up test).

Pernanently active diagnostics functions:

Cross comparison:
The SSCU modules inputs are in general internally designed with two channels. The status of input signals is permanently compared crosswise. Only with High signals in both partial input systems the input is considered a High input, should the signal level deviate between both channels, the input is set to Low state.

Dynamic test of the partial input system switching thresholds:
The switching thresholds for the detecting the High level are tested cyclically with a high cycle rate. Falling below the defined threshold value a module triggers a module alarm.

Dynamic test of the input system's switchability:
The switchability of the input system to Low level is tested for all inputs with a high rate. Falling below the defined threshold value a module triggers a module alarm.

Diagnostics functions that can be enabled by parametrization:

Cross circuit test:
The SSCU modules have clock signal outputs, identified by an unabiguous signature. When performing the cross-shorting test the switching elements of the digital sensors / input elements are supplied with auxiliary voltage by the SSCU unit via the clock signal outputs. The signature is thus stamped on the High signal level of the sensors / input elements and checked by the SSCU assembly. With the signature test short-circuits and cross-shorting to High signals can be recognized. With alternating use of the pulse signals of multi-contacts, parallel signal

lines or adjacent terminal assignment, cross-shorting between the respective input elements is detected.

Sensors / input elements with 2- or multipole contacts without time-out:
Several contacts can be assigned to the sensors / input elements. These are therefore compatible with at least 2-channel elements. A High level of the sensor/input element requires a logic series connection of both contacts.

Example 1:
Input element with 2 normally open contacts: High level when both contacts are closed

Example 2:
Input element with one normally open contact and one normally closed contact: High level when normally closed contact is actuated and normally open contact is not actuated.

Sensors / input elements with 2- or multipole contacts with time-out:
Same test as before, but additional monitoring of the input signals for compliance with the defined level connections within a time window of 0.5 seconds. Defining the levels over a time period of > 0.5 seconds triggers a module alarm.

Start-up test:
Each time the safety module (=SSCU module) is switched on, the input element must be tested in direction of the Low signal status (defined Safe State), e.g. by actuating the Emergency Stop button or a door lock after the system has been started.

Operational tests / organizational tests:

Apart from the previously mentioned diagnostic measures for the SSCU modules, cyclic testing can be performed within the application. These tests can also be used when assessing the DC.

NOTICE

Operational/organizational tests can also be used for a combination of hardware inputs and functional inputs (input information transferred via standard field bus). However, an exclusive use of functional inputs is ruled out in this context (combination of two or more functional inputs).

The SSCU modules therefore ensure far reaching diagnostics functions for the partial input system. These are performed permanently or optionally (cross-shorting monitoring by means of pulse identifier).

The following diagnoses for input sensors can generally be used for the safety related assessment of the entire system:

Input element characteristic	Parameterized / operational tests				DC	Definition of measure	Note
	Cross-shorting test	With time-out	Start test	Cyclic Test during operation			
Single-channel			O	O	>60	Cyclic test pulse by dynamic change of input signals	A sufficiently high test rate must be ensured.
	X				90	Cyclic test pulse by dynamic change of input signals	Only effective if pulse assignment is active
	X		O	O	90-99	Cyclic test pulse by dynamic change of input signals	DC depending on frequency of start / cyclic test DC = 90 test only in > 4 week intervals DC = 99 test at least 1 x day / or 100-time request rate
Dual-channel					90	Cross-comparison of input signals with dynamic test, if short-circuits cannot be detected (for multiple inputs/outputs)	For fault exclusion short-circuit up to DC=99 possible
			O	O	90-99	Cyclic test pulse by dynamic change of input signals	DC depending on frequency of start / cyclic test
	X				99	Cross-comparison of input signals with immediate and intermediate results in the logic (L) and temporal as well as logic program sequence monitoring and detection of static failures and short circuits (for multiple inputs/outputs).	Only effective if pulse assignment is active
		X			99	Plausibility test, e.g. use of normally open and normally closed contacts = non-equivalent signal comparison of input elements.	Only effective in connection with activated time-out function for input element

SAFETY NOTE



- The manufacturer's data (MTTFD, FIT-numbers, etc.) must be used for a safety related assessment of the partial system "Sensors".
- The DC-values listed in the table must be used conservatively and compliance with the boundary conditions (see table under „Remarks“) must be ensured.
- According to the applicable standards, fault exclusions are permitted. The boundary conditions mentioned in this context must permanently be met.
- If several sensor systems are required for the correct function of a single safety function, their partial values must be correctly merged by following the chosen method.

10.2.1.3. Classification of digital inputs

10.2.1.4. Digital inputs I00 … I15

Device type	Digital inputs	Achievable performance level	Comment
SSCU	I00 … I15	PL e	Suitable for any kind of input elements, with / without pulse, achievable PL depending on the $MTTF_d$ of the input element, as well as fault exclusions in the external wiring.

10.2.1.5. Exemplary connections of digital sensors

10.2.1.6. Single-channel sensor, without cross-shorting test

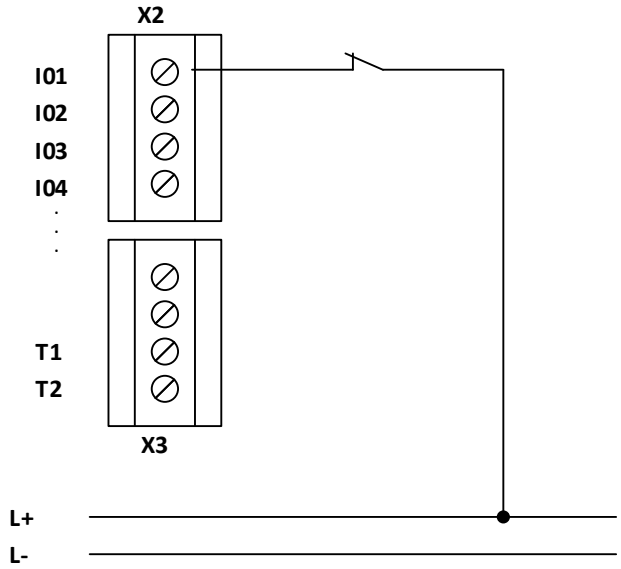

Fig. 17: Single-Channel sensor, without cross-shorting test

The single-channel sensor is connected to the SSCU module without clocking or without cross-shorting test. This design is not recommended for safety applications. PL b acc. to EN ISO 13849-1 can maximally be reached.

10.2.1.7. Single-channel sensor with cross-shorting test

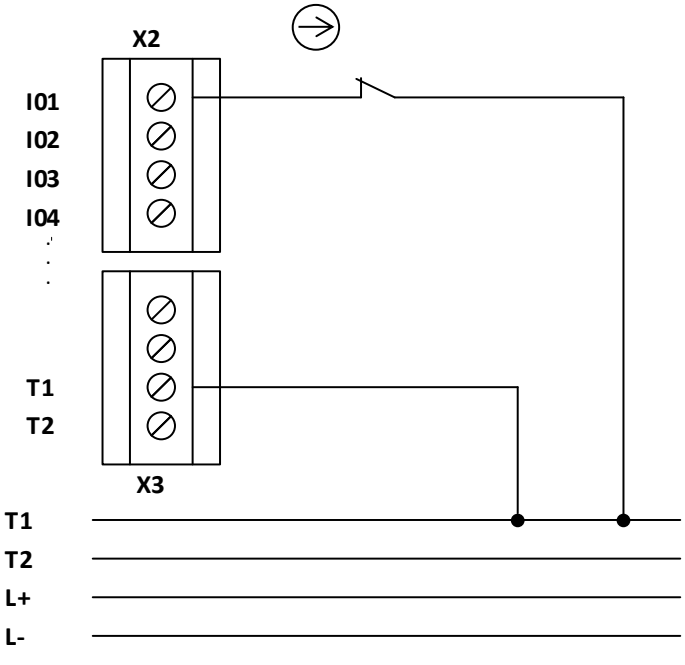

Fig. 18: Single-channel sensor with cross-shorting test

When using a single-channel sensor with clocking, the power supply of the switching element is attached to the clock output T1 or T2. The clock must subsequently be assigned to the SSCU.

The use of a single-channel sensor with clock detects:

short-circuit to supply voltage DC 24 V
short-circuit to DC 0 V
cable interruption (current interruption is safe state!)

However, be cautious in case of a cable short between the two sensor connections, because this is not detected! A short-circuit between T1 and I00.

Due to the single-channel character of the switching element / sensor its failure requires a fault exclusion. This is permissible when using positively disconnecting switches with correct constrained actuation.

A series connection of 2 switching elements with corresponding fault exclusion of a double fault is on equal footing with the application (Occurrence of two errors at the same time.
These may be e.g. the safety outputs of an electronic monitoring device (light curtain, switching mat) with internal dual-channel switch-off.

PL d acc. to EN ISO 13849-1 can be achieved by using a suitable switching element and with cautious wiring of the sensor. In special cases, i.e. in

connection with suitable switching elements and permissible fault exclusions one may also achieve PL e as per EN ISO 13849-1.

SAFETY NOTE



- PL d or higher acc. to EN ISO 13849-1 is achieved if the short-circuit between input and associated pulse output as well as the short-circuit between the sensor connections can be excluded. Here one must take care that in a fault scenario the switch must be positively opening in accordance with EN 60947-5-1. The sensor must additionally be triggered in regular intervals and the safety function requested. Fault exclusions can be achieved in accordance with EN ISO 13849-2 table D8. In case of single-channel use of the inputs, the achievable safety level must be limited to SIL 2 or PL d, if the safety function is demanded at regular intervals.
- A series connection of 2 switching elements with fault exclusion for double fault requires testing of the suitability in accordance with the intended safety level of this element. We would like to draw your attention to the applicable regulations in the EC machine directive 2006/42/EC.
- For single-channel sensors a safety related use of the inputs is only intended in connection with the clock outputs.

10.2.1.8. Dual-channel sensor without time-out and without cross-shorting

Faults are at least detected when requested. The DC is medium and by using cyclic tests (start test, operational/organizational tests) can be changed up to high level. depending on the test frequency.

Only normally closed contacts should be used for safety related applications.

PL d acc. to EN 13849-1 can be achieved when using sensors / switching elements with fault exclusion for not opening the switch contacts. This is permissible when using positively disconnecting switches with correct constrained actuation. The use of sensors with self-monitoring output contacts is also permitted.

PL e in accordance with EN ISO 13849-1 can be achieved when using sensors / input elements with sufficiently high $MTTF_d$ in connection with temporal plausibility monitoring and a sufficiently high change of the switching state = dynamic testing.

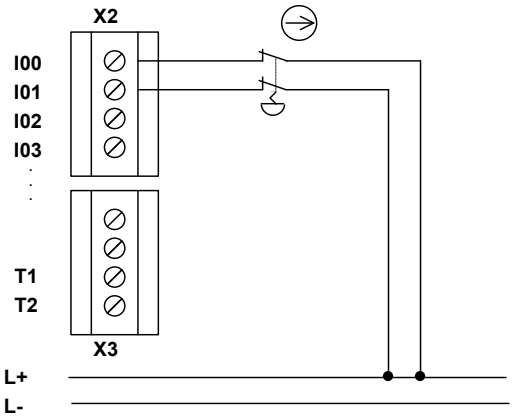

Fig. 19: dual-channel sensor homogenous without cycling, with positive disconnection

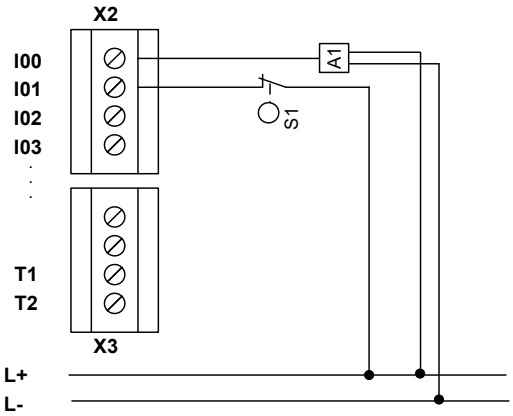

Fig. 20: dual-channel input element heterogeneous, without cycling

SAFETY NOTE 	• PL d or higher in accordance with EN ISO 13849-1 is achieved by using switching elements / sensors with positively opening contacts or positive actuation acc. to EN 60947-5-1 • Using devices for which the fault exclusion double fault for the intended safety level can be specified for the switching elements, is permitted. We would like to draw your attention to the applicable regulations in the EC machine directive 2006/42/EC.

10.2.1.9. Dual-channel sensor with time-out and cross-shorting test

Cross-shorting as well as connections to DC 24 V and DC 0 V can be detected by using two independent clock signals on the homogeneous sensor.

PL d or higher acc. to EN ISO 13849-1 can be achieved when:

- Use of sensors/switching elements with forced actuation.
- Use of 2 sensors/switching elements with independent manipulation
- dto. However, with actuation via a common actuation device in connection with an error exclusion for this device.

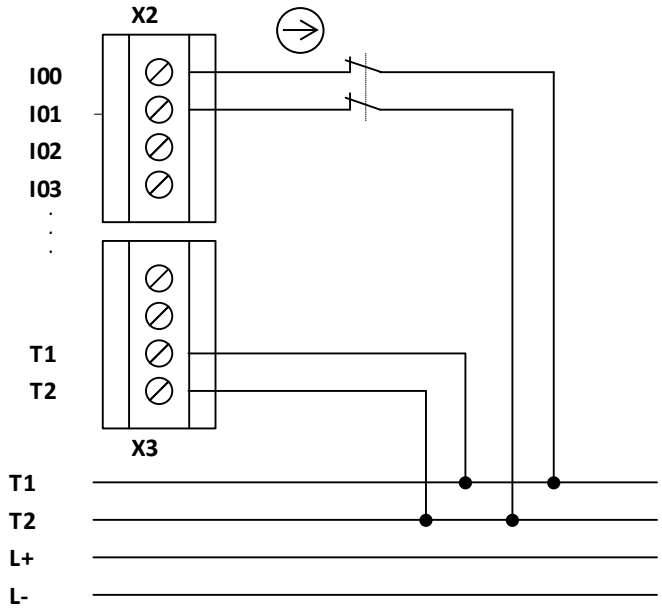

Fig. 21: dual-channel sensor homogenous with clock

SAFETY NOTE

- PL d or higher in accordance with EN ISO 13849-1 is achieved by using switching elements / sensors with positively actuation
- When using two independent sensors with independent actuation, PL d or higher acc. to EN ISO 13849-1 can be achieved.
- When using common elements in the actuation chain, a fault exclusion is required for this purpose. The corresponding limitations and criteria acc. to EN 13849-1 must be observed

10.2.1.10. Overview of achievable PL for digital safety inputs

Type of Sensor / input element	Parameterized / operational tests				Achie-vable PL acc. to EN ISO 13849-1	Fault exclusion for input element	Condition for input element
	Cross-connection	With time monitoring	Start test	Cyclic test during operation			
Single channel					b		Operation proven input element
				O	d	All faults at the input element Short-circuit at input/signal line	$MTTF_D$ = high Connection in control cabinet or protected routing
					e		
			O	O	e	All faults at the input element Short-circuit at input/signal line	Input element does not comply with min. PL r Connection in control cabinet or protected routing
	X				d	Getting caught Short-circuit at input/signal line	Mainly High level required (T_{High} > 100 * T_{Low}). Positively disconnecting $MTTF_D$ = high Connection in control cabinet or protected routing
	X		O	O	e	All faults at the input element Short-circuit at input/signal line	Input element does not comply with min. PL r Connection in control cabinet or protected routing $MTTF_D$ = high
Dual-channel parallel					d	Short-circuit between input/signal line	Connection in control cabinet or protected routing $MTTF_D$ = medium
	X				e		$MTTF_D$ = high

Dual-channel parallel		X			e	Short-circuit between input/signal line (only with common switching elements = 2xNO or 2xNC	Connection in control cabinet or protected routing $MTTF_D$ = high
Dual-channel serial					d	Short-circuit at input/signal line Getting caught / positively disconnecting	Connection in control cabinet or protected routing $MTTF_D$ = medium
			O	O	e	Short-circuit at input/signal line	Connection in control cabinet or protected routing $MTTF_D$ = high
			O	O	d	Short-circuit at input/signal line	Connection in control cabinet or protected routing $MTTF_D$ = medium
	X		O	O	e		$MTTF_D$ = high

X: Diagnostic measure activated

O: min. 1 diagnostic measure activated

10.2.2. Sensors for speed and/or position detection

10.2.2.1. General safety related structure of sensor interface for position and/or speed

The SSCU-x module is equipped with one , or two encoder interfaces per axis.

Depending on encoder type and combination, different safety levels can be reached. The following system reflection results for the corresponding partial system:

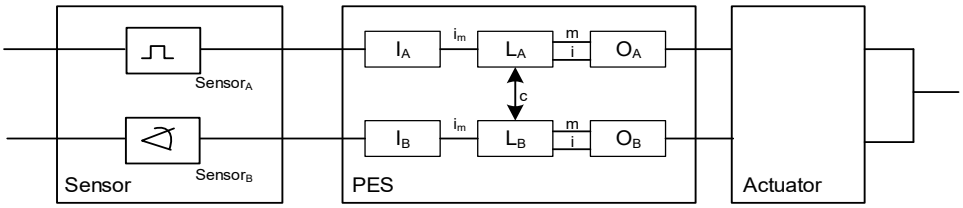

Fig. 22: dual-channel sensor system with separate signal processing

Dual sensor system with separate signal processing in two channels, diagnose by cross-comparison in the PES

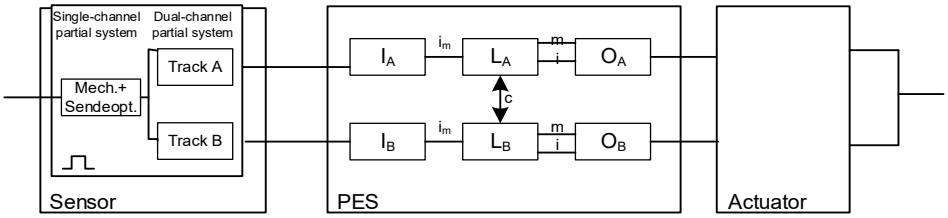

Fig. 23: Sensor system with single-/dual-channel partial system

Sensor system with single and dual-channel partial system (example incremental encoder). Diagnose by separate signal processing in two channels and cross-comparison in the PES as well as further specific diagnoses

10.2.2.2. General diagnostic measures for encoder interface

For fault detection in the sensor system the SSCU series (SDU modules) has a number of diagnostic measures implemented, depending on the chosen encoder type or its combination. These are automatically activated when choosing the encoder type.

With respect to their type and effectiveness diagnostic measures can generally be classified using the following table:

Diagnoses for sensors for position and/or speed detection:

Measure	DC	Note	Use
Cross-comparison of input signals with immediate and intermediate results in the logic (L) and temporal as well as logic program sequence monitoring and detection of static failures and short circuits (for multiple inputs/outputs).	99%	Only to be used for: - dual-channel sensor systems (2 separate sensors), - the dual channel partial system of single channel sensors (incremental encoder) - Diagnose for the single and dual channel partial system of especially suitable sensor systems (SIN/COS-encoder, resolver) - Dynamic operation / no standstill monitoring	Monitoring of 2-channel sensor systems or the corresponding partial system of sensors for dynamic operation Not to be used for standstill monitoring!
Cross-comparison of input signals without dynamic test	80-95%	DC depends on the frequency of the dynamic condition, i.e. standstill or movement, as well as on the quality of the monitoring measure (80 – 90 % for incremental encoder, 95 % for SIN/COS-encoder)	Monitoring of 2-channel sensor systems or the corresponding partial system of sensors for non-dynamic operation To be used especially for standstill monitoring!
Monitoring of some features of the sensor (response time, the area of analog signals, e.g. electric resistance, capacity)	60%	Diagnose of specific features of sensors, only to be used for speed and position sensors as per chapter 4.2.2.4	Monitoring of the single-channel partial system in single-channel sensor systems

10.2.2.3. Encodertypen und deren Kombination, Diagnosekenndaten

Encoder 1	Encoder 2	Safe speed	Safe direction	Safe absolut Position	Fault exclusion	DC		
						1-channel partial system	2-channel partial system dynamic	2-channel partial system non-dynamic (standstill-monitoring)
NC	NC	-	-	-	-	-	-	-
Resolver	NC	X	X		Mech. Encoder connection*) Code disk mounting **)	60 / 90%***)	99%	90-95%
HTL	NC	X	X		Mech. Encoder connection*) Code disk mounting **)	60% 90%***)	99%	80-90%
Incremental	NC	X	X		Mech. Encoder connection*) Code disk mounting **)	60% 90%***)	99%	80-90%
SIN/COS	NC	X	X		Mech. Encoder connection*) Code disk mounting **)	60% / 90%*)	99%	90-95%
Analog	Analog			X		n.a.	99%	90-95%
SSI	Resolver	X	X	X		-	99%	90-95%
SSI	HTL	X	X	X		-	99%	90-95%

SSI	Incremental	X	X	X		-	99%	90-95%
SSI	SIN/COS	X	X	X		-	99%	90-95%
SSI	SSI	X	X	X		-	99%	90-95%

*) For the mechanical connection, a fault exclusion can be made with the note "... only positive connections are permissible for the shaft-hub connection of the encoder axis"; alternatively, other connection forms can also be used if they meet the safety requirements. For their reliability with regard to the intended safety level, comprehensible proof must be provided in each case (e.g.: overdimensioning for positive shaft-hub connection). The corresponding notes on fault exclusion in standard EN/IEC 61800-5-2, Annex D.3.16 (Table D.8) must be observed."

For SINCOS encoders suitable for safety applications (see notes on this under...), a DC of 90% can be applied for the single-channel transmit LED.

**) The connection code disc / shaft as well as the sensor embodiment must be analyzed in detail. For a possible fault exclusion, the relevant notes in the standard EN/IEC 61800-5-2, Annex D.3.16 (Table D.8) must be observed.

***) For speed measurement by means of Proxi, the actuator and the mounting of the Proxi shall be analyzed with regard to their reliability. For a possible fault exclusion, the relevant notes in the standard EN/IEC 61800-5-2, Annex D.3.16 (Table D.8) shall be applied mutatis mutandis.

Other single-channel parts for which the 60% apply:
Power supply
Code disk mounting
Opto-receiver mechanics (not SINCOS)
Code disk

10.2.2.4. Specific diagnostic measures with regard to the encoder type used

	Encoder type	Supply Voltage Monitoring	Plausibility Test Position Signal MPUA/MPUB	Plausibility Test Speed Signal MPUA/MPUB	Comparison of the Encoder Raw Values MPUA/MPUB	Difference Level Monitoring	SIN/COS Plausibility Monitoring	Monitoring of the Permitted Quadrants	Monitoring of the Counter Signal Separated for Track A/B	Monitoring of the transfer ratio reference signal / measured signal	Frequency monitoring of the reference signal	Voltage monitoring of the reference signal	Form factor analysis of the measured signal	Input Signal Level Monitoring	Clk-Frequency Monitoring
Encoder Interface X	Incremental	X	X	X		X			X						
	SSI	X	X												
	HTL	X	X	X		X									X
	Resolver	X	X	X			X	X		X	X	X	X		
	SIN/COS	X	X	X			X								
	Analog	X	X	X		X			X					X	

1) Only in High-Resolution Mode

2) measures for encoder interface Safe PXV:
   - Checking the transmission of the safe position via CRC32
   - Analysis and evaluation of the error bits of the encoder
   - Plausibility check of the code band by dynamic color switching

10.2.2.5. Safety-related switch-off threshold encoder systems for position and speed detection

Plausibility tests with the current position and speed values are performed between both measuring channels A and B of the SSCU module as a basic measure, which are then checked against parameterizable thresholds.

The **incremental shut-down threshold** describes the tolerable deviation of position between both sensing channels A and B in the unit of the measuring distance.

The **speed shut-down threshold** describes the tolerable deviation in speed between both sensing channels A and B.

Diagnostic functions for the determination of optimal parameter values for the applications are available within the SCOPE-dialog of the parameterization tool.

NOTE Speed and acceleration are detected values with a minimal digital resolution. This fact limits the smallest possible detection of speed or acceleration and determines the digital step width for the input values.

Speed resolution:

Up to a frequency of 500 Hz or 500 steps/s speed is detected with the frequency measuring method, below this it is measured with a time measuring method. This results in the following course of the sensing fault:

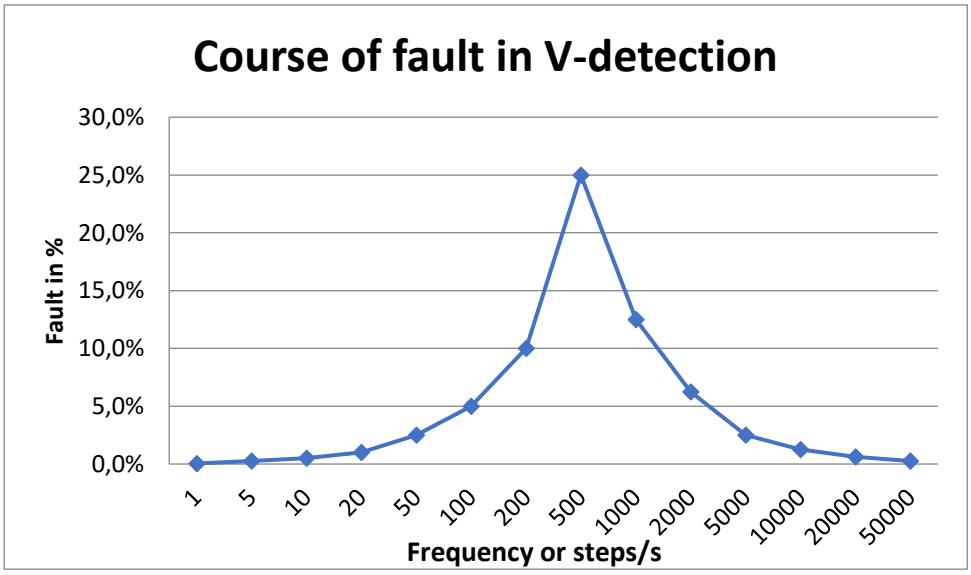

Fig. 24 Course of fault in V-detection

Digital accelaration resolution

The digital acceleration resolution is limited by a maximum peak time of 256 ms and the encoder resolution. The garphs below show the lowest measurable acceleration in dependence on the resolution in revolutions/min, mm/s² and m/s².

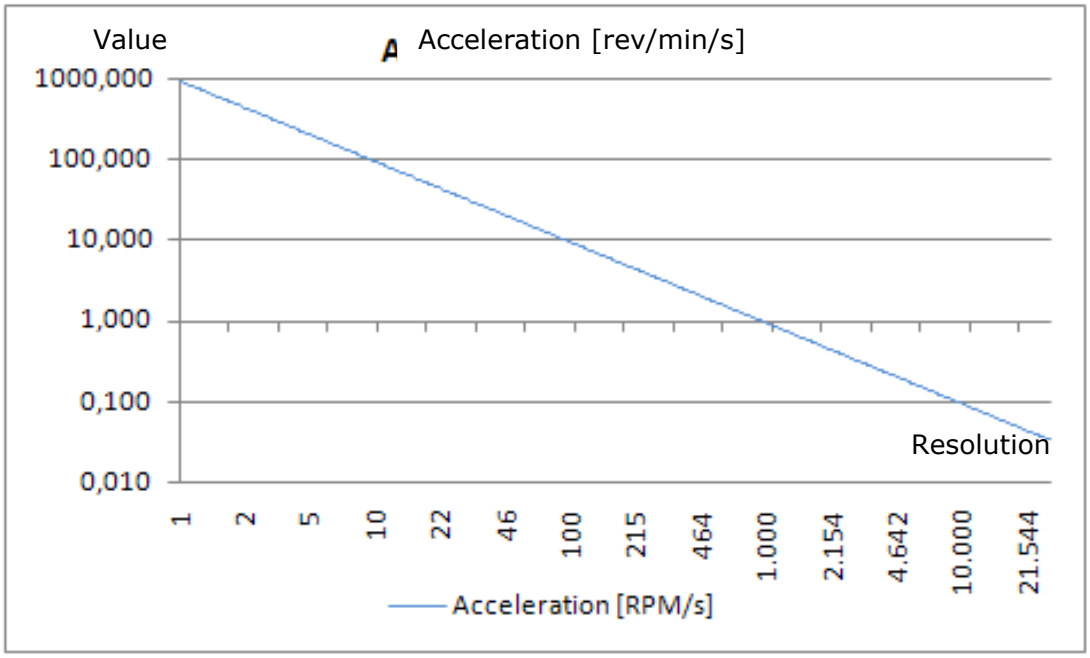

Graph acceleration, rotary (Values in rev/min/s)

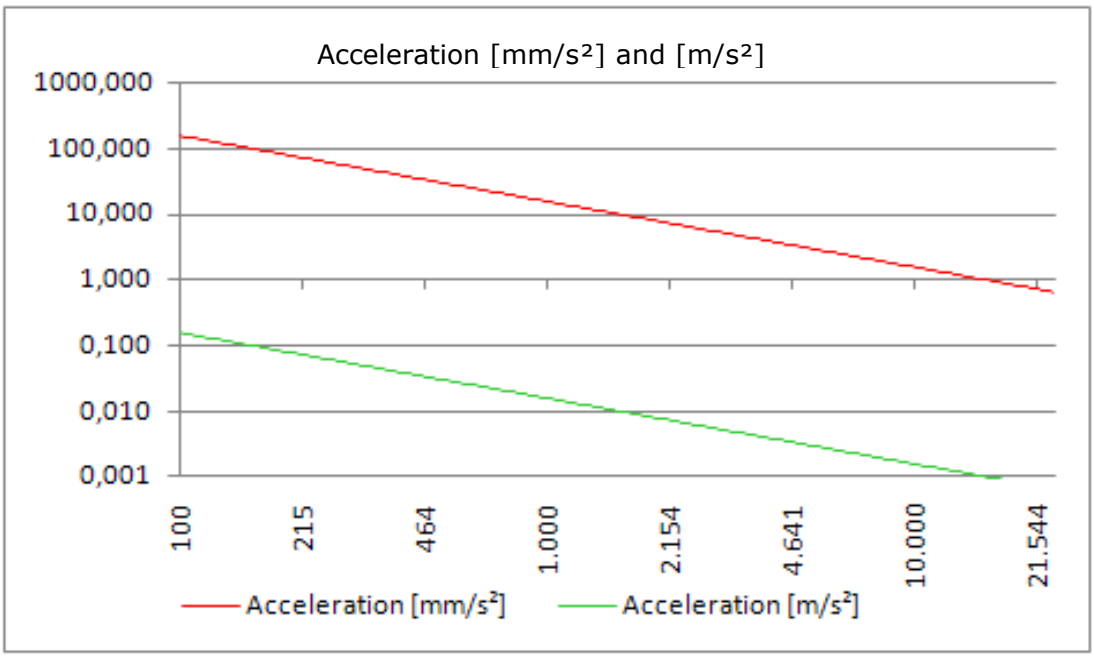

Graph acceleration, linear (values in mm/s and m/s²)

SAFETY NOTE



- The fault can be optimized by choosing a suitable sensor resolution for the corresponding application.
- For applications with limited resolution and/or time variance of the sensing signal, the functional performance of the monitoring function used can be improved by using an average filter. The average filter "smoothes" digital spurious components of the sensors. However, this is achieved at the cost of a longer response time of the overall system.
- The filter time can be variably set between 0 and 64 in steps of 8. The dimension is "msec". In order to determine the response time of the overall system, the filter times must be added to the specified response times of the SSCU system (see chapter 9).

SAFETY NOTE



- The manufacturer's data ($MTTF_D$, FIT-numbers, etc.) must be used for a safety related assessment of the partial system "Sensors".
- If the manufacturer demands specific diagnoses to be able to guarantee the specified safety related characteristic values, these must be checked with respect to the specific encoder as specified in the table "Specific diagnostic measures for position and speed sensors". If in doubt, the matter must be clarified by the manufacturer.
- The DC-values listed in the table must be used conservatively and compliance with the boundary conditions (see table under „Remarks“) must be ensured.
- In order to determine the DC-value for safety functions with standstill monitoring a frequency assessment of the dynamic status may be required. A DC of 90 % may here be used a s a guide value.
- According to the applicable standards, fault exclusions are permitted. The boundary conditions mentioned in this context must permanently be met.
- If several sensor systems are required for the correct function of a single safety function, their partial values must be correctly merged by following the chosen method. This applies also for a combination of digital and analog sensors (e.g. safely reduced speed with open safety door = door contact + encoder for speed detection)
- By choosing a suitable resolution of the sensor system a sufficiently low tolerance with regard to the corresponding cut-off thresholds for the individual safety functions must be ensured.
- When using the encoder input filter, one must consider the extension of the response time when assessing the safety related function.

10.2.2.6. Safety-related evaluation of encoder systems, resolvers or their combination

Due to the monitoring functions implemented in the SSCU-series, no special demands are initially made on the internal design of the encoder electronics in applications with encoder systems, i.e. standard encoders can normally be used.

A safety related assessment of the overall arrangement must generally be made. Data issued by the encoder manufacturer (FIT, MTTF) as well as the DC from the table in chapter 10.2.2.2 General diagnostic measures for encoder interface" must in this case be used.

When using individual encoders at least a fault exclusion for the mechanical actuating chain, as well as for the single-channel part of must be made under due consideration of the applicable specification in EN ISO 13849-1. Furthermore, the information in "10.2.2 Sensors for speed and/or position detection" must also be observed.

PL d and higher acc. to EN ISO13849-1 is normally reached by a combination of two encoders with prioritized different technology and separated mechanical linking.

The use of compact encoders with internal 2-channel structure of different technology is also suitable for applications up to PL e acc. to EN 13849-1, however, under due consideration of the specifically required fault exclusions and their permissibility. Normally

one should use encoders with proven safety related characteristics, the safety level of which meets the demanded level.

SAFETY NOTE



- They use of standard encoders or a combination of standard encoders is permitted. A safety-related evaluation is strictly required for the overall arrangement consisting of encoders, sensors/switching elements for triggering the safety function, the SDU module and the shutdown channel. To determine the safety level achieved, the manufacturer's specifications (FIT, MTTF) and the DC must be used in accordance with the requirements in ”10.2.2 “
- If only one encoder is used, the fault exclusion "shaft breakage / fault in the mechanical encoder connection" is required. Suitable measures must be applied for this purpose, e.g. a positive connection of the encoder by means of slot shim or locking pin. The applicable information issued by the manufacturer as well as EN ISO 138549-1 with respect to requirements and permissibility of the fault exclusion must strictly be followed.
- Encoders with proven safety related characteristics must preferably be used as individual encoders. The safety level of these encoders must at least meet the intended safety level of the overall arrangement. The information of the manufacturer with respect to diagnostic measures, mechanical connection and measures for the voltage supply must be strictly followed.
- SIN/COS encoder: The internal structure of the sensor system must be designed in such a way, that output signals for both tracks can be generated independently from each other and Common-Cause faults can be ruled out. Evidence of the mechanical design, e.g. fastening of the code disc on the shaft, must also be provided. Encoders with proven safety related characteristics should preferably be used.
- When using compact encoders with internal dual-channel structure, such as e.g. SSI + incremental/SinCos, you must strictly follow the instructions of the manufacturer concerning safety related characteristics, diagnostic measures, mechanical connection and measures concerning the electric power supply. The safety level of the encoder must at least meet the intended safety level of the overall arrangement. Encoders with proven safety related characteristics should preferably be used.

The SSCU- module generally detects the following faults in the external encoder system:

- Short-circuits between safety relevant signal lines
- Interruptions in safety relevant signal lines
- Stuck at 0 or 1 on one or all safety relevant signal lines

Each encoder type has further specific diagnoses for fault detection in the external encoder system assigned. The following list sows the respective diagnostic measures for the individual encoders, together with the limiting parameters.

SAFETY NOTE



- The diagnostic measures obviously have tolerances because of measuring inaccuracies. These tolerances must b e accounted for in the safety related assessment.
- The limiting values for the corresponding diagnostic measures are partly parametrizable or fixed. The diagnostic coverages resulting from this must be assessed in relation to the application and included in the safety related overall assessment.

10.2.3. Analog sensors

The SSCU-x has two analog inputs with two input channels each. Only 2-channel sensors can generally be connected to this interface.

The internal signal processing takes place separately in the two channels with cross-comparison of the results.

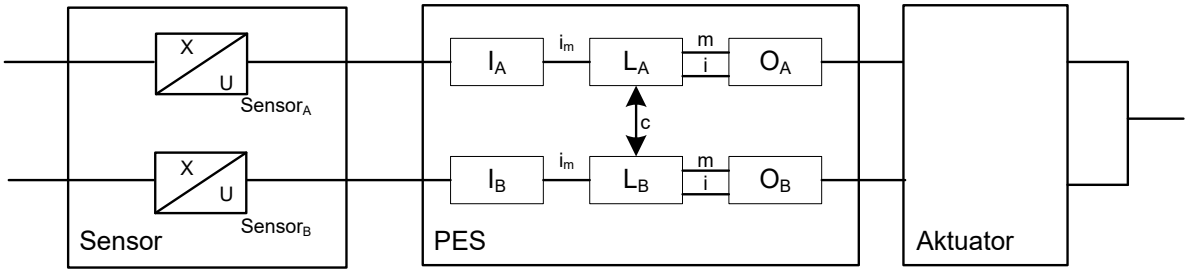

Dual-channel sensor system with seperate signal processing in two channels, diagnose by cross-comparison in the PES

As with other sensor systems, a vast number of diagnostic measures has been implemented.

With respect to their type and effectiveness diagnostic measures can generally be classified using the following table:

Diagnoses for sensors for position and/or speed detection

Measure	DC	Note	Use
Cross-comparison of input signals with dynamic test, if short-circuits cannot be detected (for multiple inputs/outputs)	90	Comparison of the analog input values with identical characteristics for both channels	Monitoring of dual-channel systems with identical characteristic of the input signals
Cross-comparison of input signals with immediate and intermediate results in the logic (L) and temporal as well as logic program sequence monitoring and detection of static failures and short circuits (for multiple inputs/outputs).	99	Comparison of the analog input values with diverse characteristic for both channels. E.g. inverse signal course, etc.	Monitoring of dual-channel systems with diverse characteristic of the input signals

SAFETY NOTE



- The manufacturer's data ($MTTF_D$, FIT-numbers, etc.) must be used for a safety related assessment of the partial system "Sensors".
- The DC-values listed in the table must be used conservatively and compliance with the boundary conditions (see table under „Remarks“) must be ensured.
- According to the applicable standards, fault exclusions are permitted. The boundary conditions mentioned in this context must permanently be met.
- If several sensor systems are required for the correct function of a single safety function, their partial values must be correctly merged by following the chosen method. This applies also for a combination of digital and analog sensors (e.g. safely reduced speed with open safety door = door contact + encoder for speed detection)

10.2.3.1. Exemplary connection of analog sensors

By using suitable sensors and careful wiring of the sensor
PL e acc. to EN ISO 13849-1 can be achieved.

.

10.2.3.1.1. Voltage and current sensor

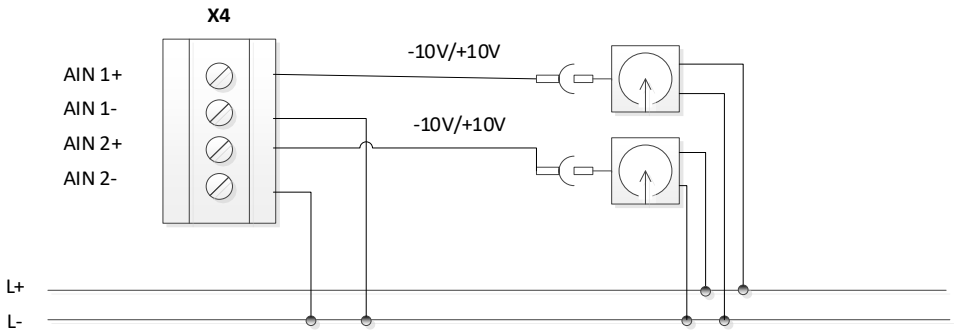

10.2.3.1.2. Voltage sensor with test pulse

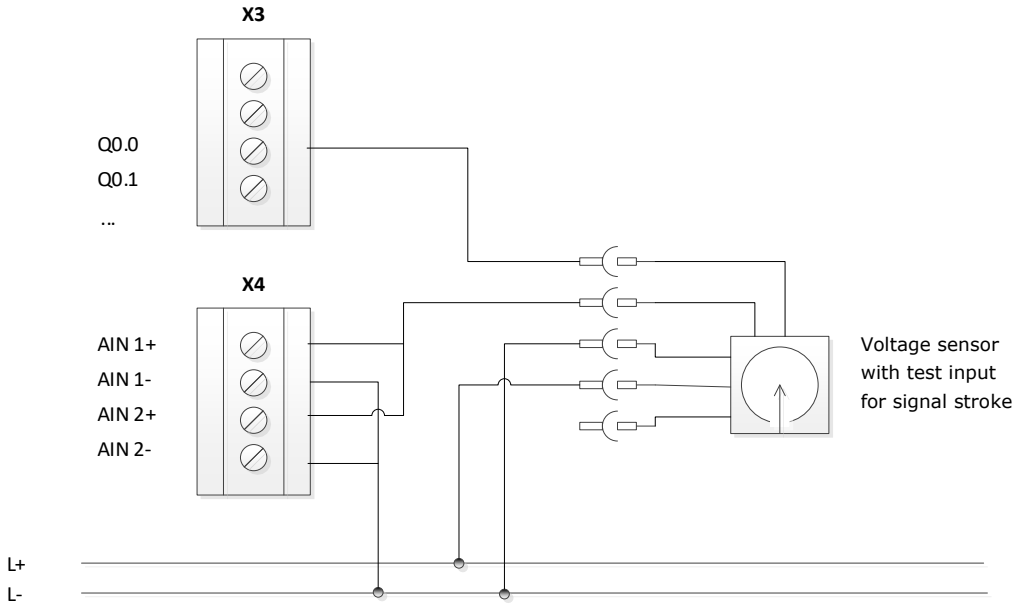

10.2.3.1.3. Current sensor with test pulse

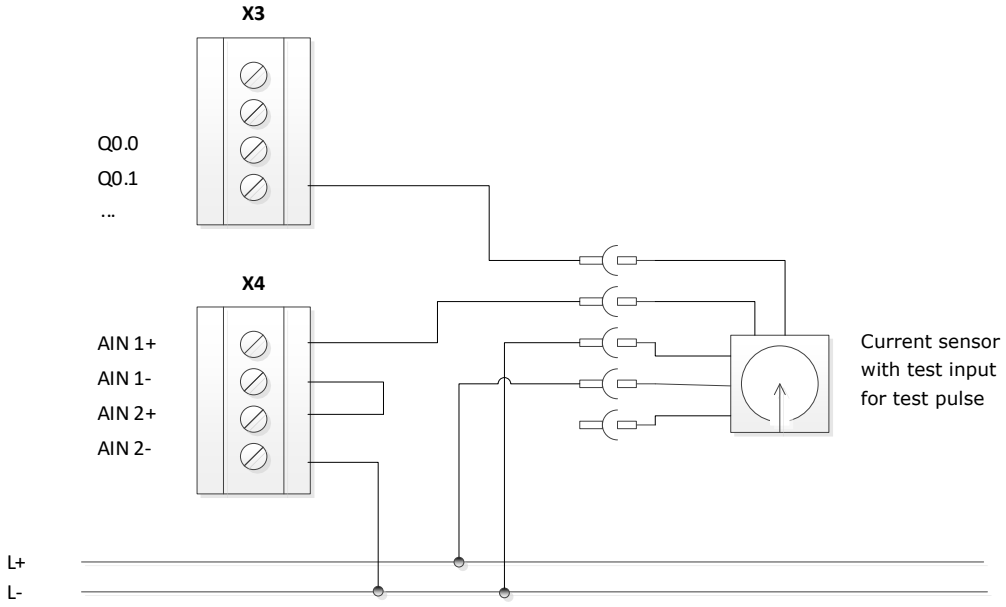

SAFETY NOTE



- PL e acc. to EN ISO 134849-1 is achieved when using two non-reactive sensors, for which Common Cause faults can be ruled out.

10.3. Safety related characteristic data and wiring of the outputs

The SSCU/SDU-modules all have safe outputs of various types. For wiring, the corresponding characteristic as specified in the following description, must be accounted for.

10.3.1. Charakteristic of output elements

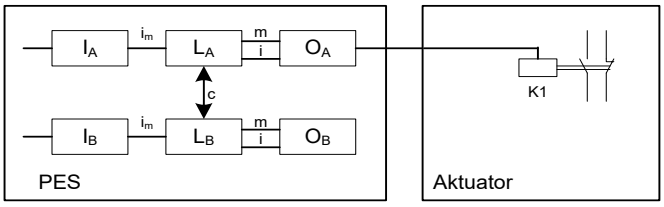

Single-channel output and single-channel actuator without diagnostics

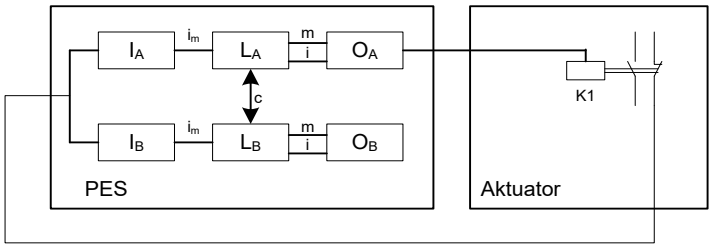

Single-channel output and single-channel actuator with diagnostic

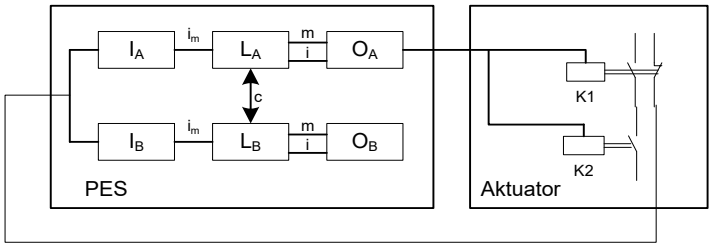

Single-channel output (Rel 1 / 2, DO 0/1P, DO 0/1M) and dual-channel actuator
with at least single-channel diagnostic.

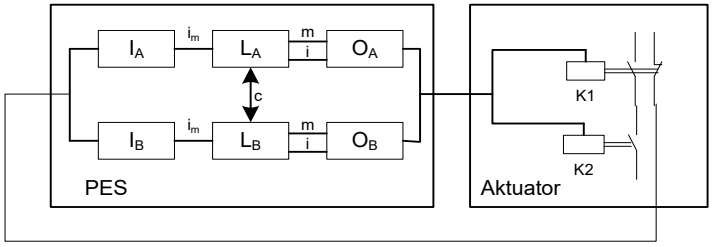

Single-channel output with internal dual-channel processing (IQx) and dual-channel actuator with at least single-channel diagnostic

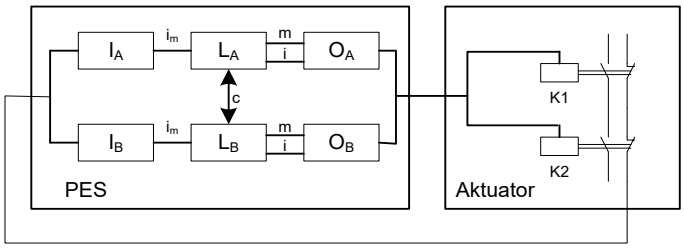

Single-channel output with internal dual-channel processing (IQx) and dual-channel actuator with dual-channel diagnostic

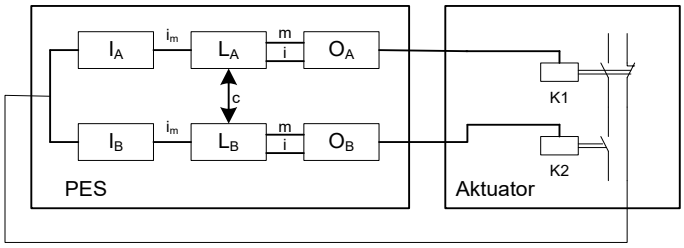

Dual-channel output and dual-channel actuator with single-channel diagnostic

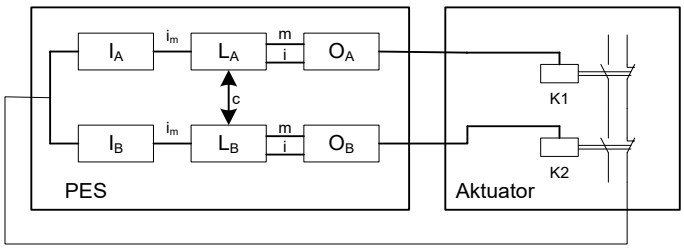

Dual-channel output and dual-channel actuator with dual-channel diagnostic

10.3.2. Diagnoses in the cut-off circuit

The shut-off circuits have permanently implemented and parameterizable diagnostic functions. Certain diagnostic functions also include the external part of the shut-off channel. The resulting DC values differ depending on the use of these diagnostic functions.

10.3.2.1. Diagnostic functions

Permanently implemented diagnostic functions:

Cross-reading of the outputs:
All safety outputs are read back in the complementary channel. Errors in the internal shut-off circuit of the SSCU device are therefore detected with DC = High.

Cyclic output status check for Qx.y and Qx.Ry (only actuation of the relay),
The shut-off capability of these outputs is tested cyclically. A failure of the shut-off option is detected unambiguously.

Configurable diagnostic functions via the SafePLC² programming software in the device property:
Depending on the configured output SIL level (= SIL 3), the shut-off capability for Qx.y and Qx.Ry is checked (only actuation of the relay) when the output signal is active.

With a configured output SIL Level (SIL 2), the outputs Qx.0 to Qx.7 can be configured as OSSD outputs. With the OSSD outputs, a test pulse and a test period can be configured via **SafePLC²**. The test pulse is checked with the output signal active

Parameterizable safety functions EDM via the SafePLC² programming software:

Readback of the actuator status via auxiliary contacts, position indicators, etc.:
The current status of the actuator is detected by reading back appropriate auxiliary contacts or position indicators and compared with the target status. This makes it possible to detect discrepancies unambiguously.

NOTICE	• The DC depends ona single-channel or dual-channel diagnose as well as on the switching frequency.

Testing the cutout ability for Q0.0 – Q0.7:
Once this function has been activated, the cutout ability of these outputs is cyclically tested. Failure of the cutout possibility is clearly detected.

10.3.2.2. Overview DC with respect to the chosen diagnostic functions

Measure	DC	Note	Use
Monitoring of outputs by a channel without dynamic test.	0-90%	DC depending on switching frequency When using elements for switching amplification external relays or contactors) only effective in connection with the readback function of the switching contacts	Monitoring of electro-mechanical, pneumatic or hydraulic actuators / outputs
Redundant cutout path with monitoring one of the drive elements	90%	When using elements for switching amplification external relays or contactors) only effective in connection with the readback function of the switching contacts	Monitoring of the outputs with direct functions as safety circuit or monitoring of safety circuits with elements for switching amplification of pneumatic / hydraulic control valves in connection with readback functions from their switching status
Cross-comparison of input signals with immediate and intermediate results in the logic (L) and temporal as well as logic program sequence monitoring and detection of static failures and short circuits (for multiple inputs/outputs).	99%	When using elements for switching amplification external relays or contactors) only effective in connection with the readback function of the switching contacts For applications with frequent safety shut-down requests these tests should be performed more frequently, e.g. at the beginning of the shift, 1 x per week. However, a test should at least be carried out cyclically 1 x year.	Monitoring of the outputs with direct functions as safety circuit or monitoring of safety circuits with elements for switching amplification of pneumatic / hydraulic control valves in connection with readback functions from their switching status

10.3.3. Permissable capacitive and inductive load at safe outputs

The safe outputs of the SSCU exhibit an OSSD character. That is, the outputs are cyclically switched off for the test of the switching off ability and the status is read back.

The examination of the switching off ability takes place according to the following criteria/functions:

- After switching the output off, the output voltage may max. be 5.6 V
- The permissible voltage level must be achieved at the latest after 400 µs
- If the permissible voltage level is reached, the test is seen as successful, the output is activated again without further delay
- If the permissible voltage level is still not reached after 400 µs, an alarm is triggered and all safe outputs (second channel with safe outputs!) are deactivated

The following representation shows the ideal (green curve) and typical (red curve).

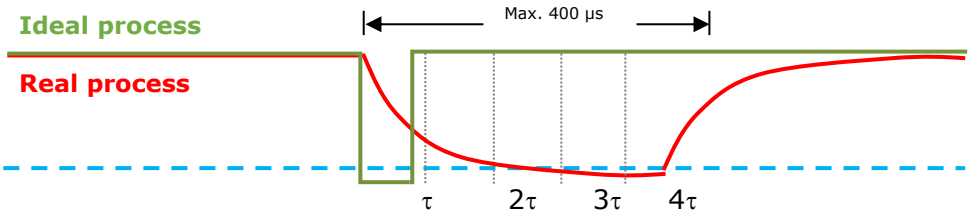

For the determination of the maximally permissible capacity or inductance, the time constant τ of the real RC or RL member at the output must be viewed.

This RC or RL member determines the real discharge curve:
The voltage level of max. 5.6 V is securely reached after 3 τ.

It thus applies:

$$3\tau \leq 350\mu s$$
$$\tau \leq 100\mu s$$

With that connection:

$$\tau = RC = \frac{L}{R}$$

the max. usable capacitive or inductive load can be determined in connection its Ohm's load:

$$C_{max} = \frac{\tau}{R} \quad \frac{10^{-4}}{R}$$

or

$$L_{max} = \tau R = 10^{-4}.R$$

Typical values for the capacity C are C=20 nF and for longitudinal inductance L = 100 mH

10.3.4. Digital outputs

The modules

- SSCU/1 and SSCU/1/AX

all have basic outputs of identical design.

10.3.4.1. Characteristic data of the basic outputs

The SSCU Series provides different types of outputs which can be interconnected individually or in groups.

output	Architecture acc. to EN ISO 13849-1	Comment
Combination of 2 relays QR0 – QR1	4	Complete tripping channel in compliance with architecture category 4 acc. to EN ISO 13849-1
QR0, QR1	Non safe	Only functional
QX00 _PP and QX01_PN	4	Complete tripping channel in compliance with architecture category 4 acc. to EN ISO 13849-1
QX00_PP	Non safe	Only functional
QX01_PN	Non safe	Only functional
QX02_PP und QX03_PN	4	Complete tripping channel in compliance with architecture category 4 acc. to EN ISO 13849-1
QX02_PP	Non safe	Only functional
QX03_PN	Non safe	Only functional
QX00 – QX03	4	Complete tripping channel in compliance with architecture category 4 acc. to EN ISO 13849-1
T1	Non safe	Auxiliary output
T2	Non safe	Auxiliary output

The Qx.x_PP, Qx.x_PN and Qx.0 - Qx.y outputs are subjected to a plausibility test in all operating states. In the switched-on state, all outputs are checked for correct functioning with a cyclic test pulse. For this purpose, the output for the configured output SIL level (= SIL 3) is switched for a maximum test duration TT < 500 µs (typically 200 µs) to the respective inverse value, i.e. a P-switching output is briefly switched to 0 VDC potential and an N-switching output is briefly switched to 24 VDC potential.

The relay outputs Qx.x_R1, Qx.x_R2 are monitored for plausibility with each switching cycle. In order to maintain the safety function, the relay outputs must be cyclically switched

and therefore tested. The switching/test cycle must be defined depending on the application.
Qx0.0 ... Qx.7 are subjected to a plausibility test for the configuration as OSSD outputs. In the switched-on state, these outputs are checked for correct functioning with a cyclic test pulse. The shut-off duration and test repetition can be configured

SAFETY NOTE



- For applications with frequent safety shut-down requests these tests should be performed more frequently, e.g. at the beginning of the shift, 1 x per week. However, a test should at least be carried out cyclically 1 x year.
- The test function for the outputs is performed for groupes and individual controls. The auxiliary outputs are not tested
- **The High-Side (Qx_PP) and Low-Side (Qx_PN) outputs must individually not be used for safety duties. Any use for safety duties is only permitted for High-Side / Low-Side combination (Note: not relevant from FW release 05-00-00-01)**
- A mixed operation with the relay contacts is **not** permitted!

  Mixed operation: A dangerous contact voltage potential may not be mixed with a protective low voltage.

.

Example:
INCORRECT: 230 V AC (120 VAC cULus) are switched over QR0L + QR0 and 24 V DC are switchable over QR1L+ QR1
CORRECT: 230 VAC (120 VAC cULus) are switched over QR0L + QR0 and over QR1L+ QR1 respectively.
Or 24 V DC are respectively switched over QR0L + QR0 and QR1L+ QR1.

.

The outputs can be loaded as follows:

Output	Voltage	Current
Relay QRx.y	DC 24 V	2,0 A (DC 13, pilot duty) 4,0A (at 0,1Hz) Max. permissible switching cycles over the entire service life: 120,000 (at 4 A; DC 24V
Tx	DC 24 V	500 mA
QXx_PP	DC 24 V	2 A
QXx_PN	GNDEXT	2 A
Qx.0 … Qx.7	DC 24 V	0,5 A

10.3.4.2. Wiring examples basic outputs

10.3.4.3. Single-channel switching relay or semi-conductor output without test

External contactors can be used for the connection of multiphase applications or with increased power requirements. In the event of a single-channel connection without external testing, it should be noted that the ctrlX SAFETY device does not detect the adhesion of one or more external contacts. The following switching example is only suitable to a limited extent for safety applications, a maximum of PL b according to EN ISO 13849-1 can be achieved!

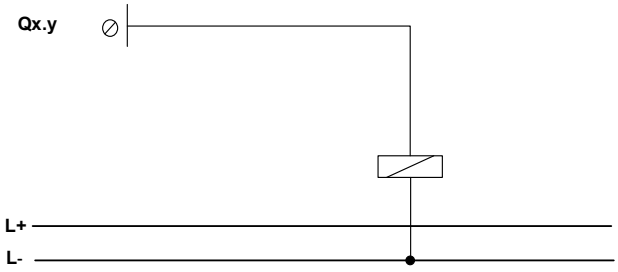

Fig. 25: Single-channel switching P-output.

Identifier	Value	Short description
Qx.y	Qx.0 ... Qx.7 Qx.8_PP ... Qx.11_PP	Outputs are configured as SIL3

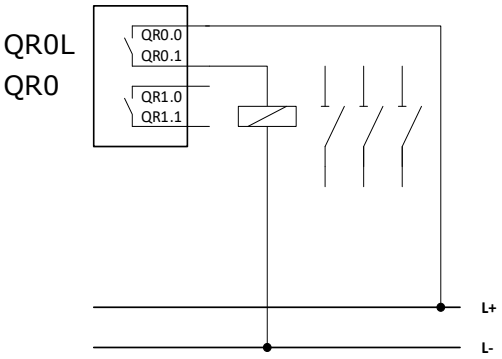

Fig. 26: Single-channel switching relay output.

Identifier	Value	Short description
QRx.y	QR0.0, QR0.1 QR1.0, QR1.1	Relay output 1 and 2

SAFETY NOTE



- Not recommended for safety applications! In this context see also the notes in EN ISO 13849-1 concerning the application and the required fault exclusions.

10.3.4.4. Single-channel switching relay or semi-conductor output with external switching amplifier and testing

If external switching amplifiers or downstream electromechanical, pneumatic or hydraulic components are used, a device for testing the complete chain and a signaling/warning device for detected faults are required to achieve PL c or higher.

In particular, positively guided auxiliary contacts are required for electromechanical devices or signaling contacts for the valve position are required for hydraulic or pneumatic components. The signaling/warning device must immediately indicate the dangerous situation to the operator.

The achievable PL depends on the test rate, a maximum of PL d according to EN ISO 13849-1 can be achieved!

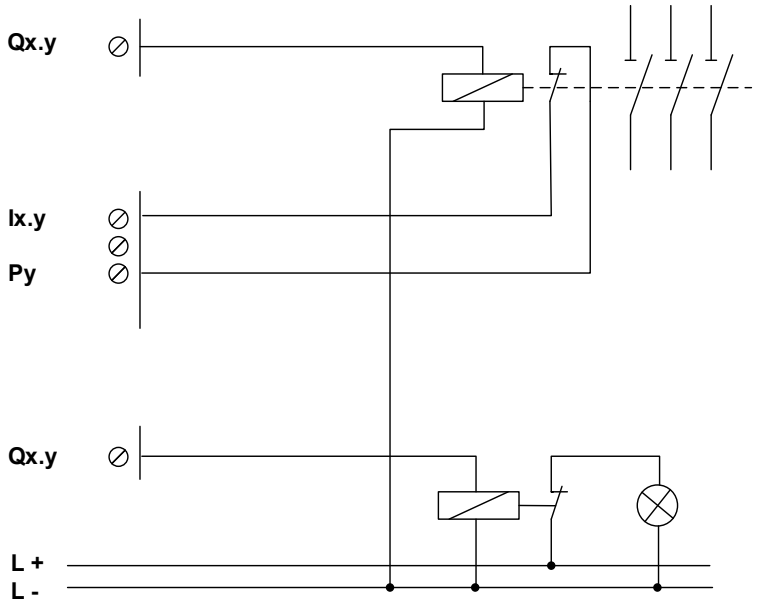

Fig. 27: Single-channel relay output with testing

Identifier	Value	Short description
Qx.y	Qx.0 ... Qx.7 Qx.8_PP ... Qx.11_PP	Outputs are configured as SIL3
Ix.y		Digital input
Py		Pulse output (T1, T2)

SAFETY NOTE



- Only conditionally recommended for safety applications! In this context see also the notes in EN ISO 13849-1 concerning the application and the required fault exclusions.
- For category 2 a test rate >= 100 * request rate is required.
- If a hazardous situation is detected during a test of the safety function, suitable control measures must be initiated. For PL d, a safe state must be initiated which may not be lifted until the fault has been eliminated. For PL up to and including PL c, it is also possible to indicate a fault by means of a warning or signalling device if a safe state cannot be initiated.

10.3.4.5. Single-channel switching relay or semi-conductor output with dual-channel external circuit with testing

For safety applications from PL c after EN ISO 13849-1 it is recommended, or demanded to access two external switching off elements. For reaching error of PL c or higher, a device for testing the complete chain and a notification/warning device is further required when an error is recognized – see notes under 10.3.4.4.

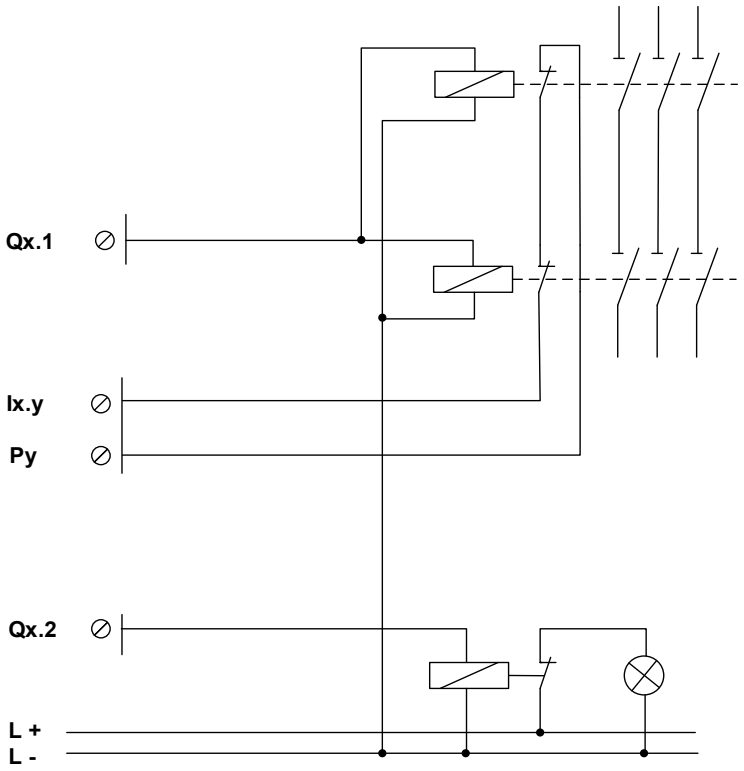

Fig. 28: Single-channel switching outout *Qx.y* with dual-channel external circuit and monitoring at Ix.y as collective feedback

Identifier	Value	Short description
Qx.1 Qx.2	Qx.0 ... Qx.7 Qx.8_PP ... Qx.11_PP	Outputs are configured as SIL3
Ix.y		Digital input
Py		Pulse output (T1, T2)

The two external monitoring contacts are connected in series, fed by the pulse signal Py and read via input Ix.y. Input Ix.y was used as the read-back input, but any other input can also be assigned.

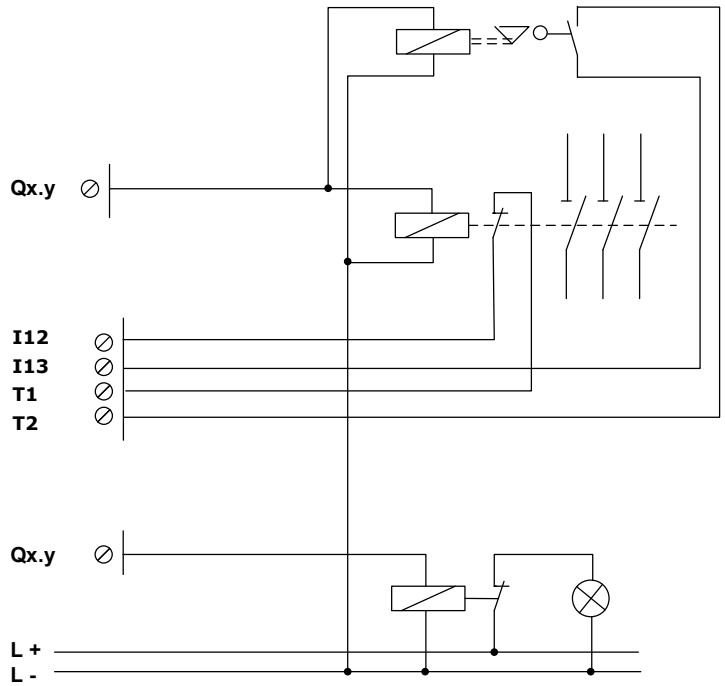

Fig. 29: Single-channel switching output *Qx.y* with dual-channel external circuit as combination of electro-mechanical element and hydraulic/pneumatic valve and monitoring at two inputs

Identifier	Value	Short description
Qx.y	Qx.0 ... Qx.7 Qx.8_PP ... Qx.11_PP	Outputs are configured as SIL3
Ix.y		Digital input
Py1, Py2		Pulse output (T1, T2)

SAFETY NOTE



- Only conditionally recommended for safety applications! In this context see also the notes in EN ISO 13849-1 concerning the application and the required fault exclusions.
- For PL c and higher a message/warning feature is required, which informs the operator immediately about a dangerous situation
- For higher requirements you must make sure that at least 1 switching operation must take place every 24 hours, in order to test the switching ability of the external power contactor.

10.3.4.6. Dual-channel switching relay output with external monitoring- group feedback

For safety related applications from Pl d acc. to EN ISO 13849-1 two relays on the SSCU/SDU module and two external power contactors are used.

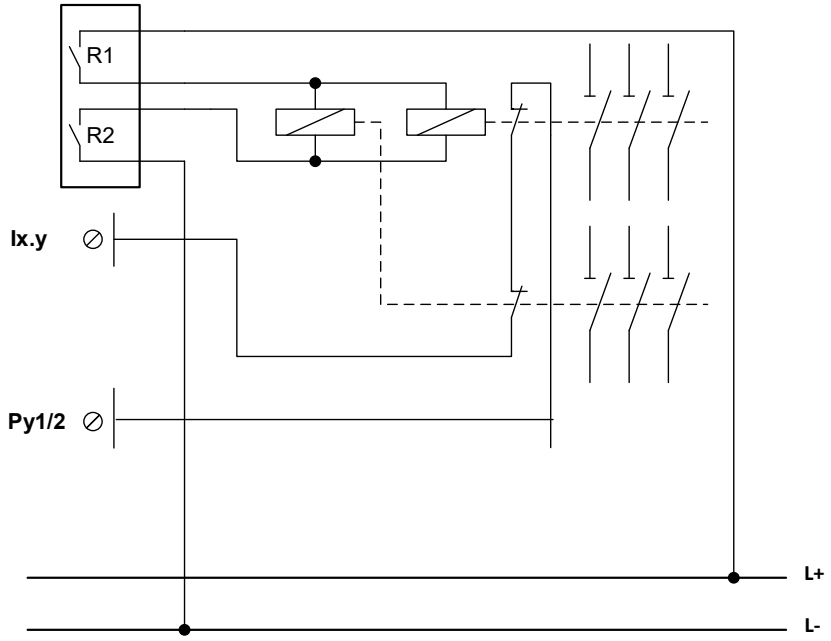

Fig. 30: Two-channel switching relay output with external monitoring – group feedback

Identifier	Value	Short description
QRx.y	QR0.0, QR0.1 QR1.0, QR1.1	Relay output 1 and 2 (R1, R2)
Ix.y		Digital input
Py1, Py2		Pulse output (T1, T2)

The two external monitoring contacts are switched in series, supplied by the clock signal T1 and read in from I00 (configured as EMU-input). In case of higher demands, one must consider that at least 1 switching process must take place every 24 hours.

SAFETY NOTE



- For achieving PL e acc. to EN ISO 13849-1 a sufficiently high testing rate is required.
- For applications with frequent requests for safety shut-off, tests must be performed with short time intervals. (The requirements can be found in the application standards, e.g. shut-off of the outputs at the start of the shift, 1 x per week)

10.3.4.7. Dual-channel output with relay output and semi-conductor output – external control circuit with monitoring

For safety applications from PL d and higher acc. to EN ISO 13849-1. The external circuit is controlled in dual-channel mode via a relay and a semi-conductor output. Each of the two external cutout paths is monitored. For PL e acc. to EN ISO 13849-1 a sufficiently high testing rate and $MTTF_D$ = high is demanded for the external circuit.

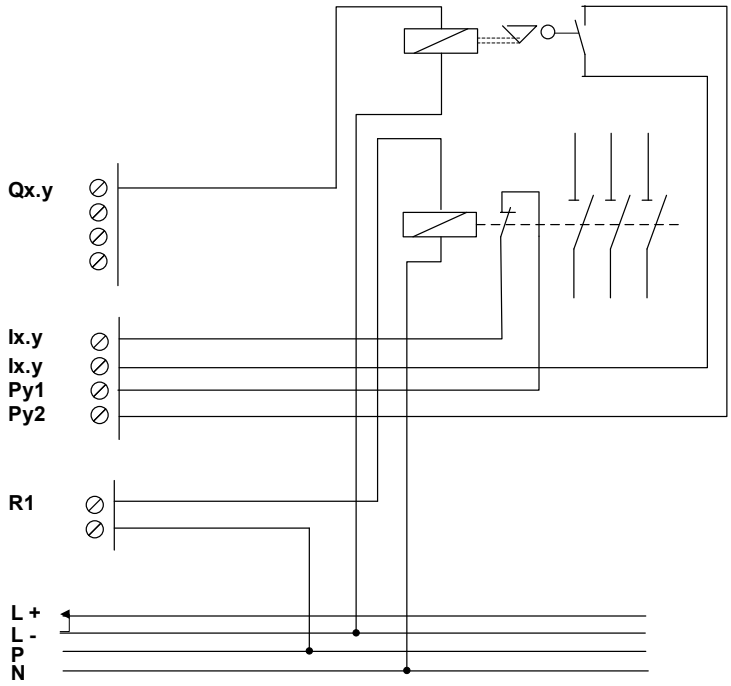

Fig. 31: Dual-channel output with relay output and semi-conductor output – external control circuit with monitoring

Identifier	Value	Short description
Qx.y	Qx.0 ... Qx.7 Qx.8_PP ... Qx.11_PP	Outputs are configured as SIL3
R1	QR0.0, QR0.1	Relay output 1
Ix.y		Digital input
Py1, Py2		Pulse output (T1, T2)

10.3.4.8. Dual-channel output with relay output and external control circuit in PL e

For safety applications from PL d and higher acc. to EN ISO 13849-1. The external circuit is controlled in dual-channel mode via the relay outputs. For PL e acc. to EN ISO 13849-1 a sufficiently high testing rate and PL e is demanded for the external circuit.

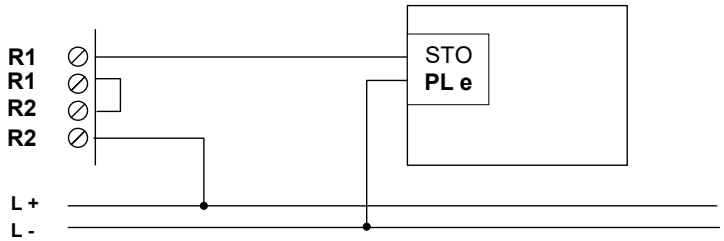

Fig. 32: Dual-channel output with relay output – external control circuit in PL e

Identifier	Value	Short description
R1	QR0.0, QR0.1	Relay output 1
R1	QR1.0, QR1.1	Relay output 1

10.3.4.9. Dual-channel output with semi-conductor output and external control circuit in PL e

For safety applications from PL d and higher acc. to EN ISO 13849-1. The external circuit is controlled in dual-channel mode via the semi-conductor outputs. For PL e acc. to EN ISO 13849-1 PL e is demanded for the external circuit

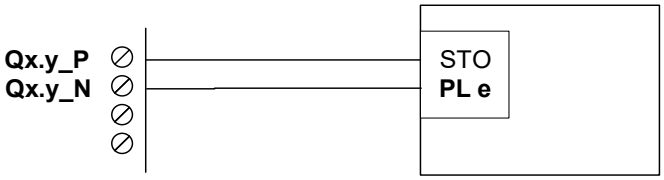

Fig. 33: Dual-channel output with semi-conductor output and external control circuit in PL e

Identifier	Value	Short description
Qx.y_P, Qx.y_N	Qx.8 _P and Qx.9_N Qx.10_P and Qx.11_N	Outputs are configured as SIL3

10.3.4.10. Wiring of a auxiliary output

Both semi-conductor outputs can be wired for functional applications. The outputs can be configured as auxiliary outputs (SIL2).

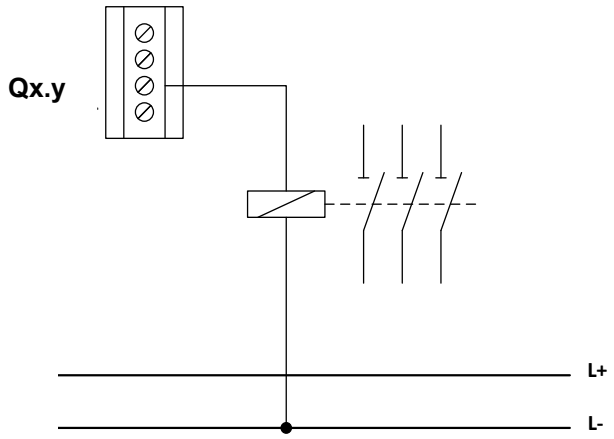

Fig. 34 wiring of a notification output

Identifier	Value	Short description
Qx.y	Qx.y	Outputs are configured as SIL2

Applications with notification outputs are not accepted!

10.3.4.11. Overview of achievable PL for digital safety outputs

Output	Actuator / external cut-off circuit	Cat. Acc. to EN ISO 13849-1	DC		$MTTF_D$ Actuator	Achievable PL acc. to EN ISO 13849-1	Boundary conditions	Fault exclusion
Single channel (SIL2) Auxiliary outputs	Single-channel Contactor, valve, brake, etc. without direct feedback for diagnostics.	Cat. B	0%		Average	b	Contactor and downstream actuators appropriately designed for safety application	
	Single-channel Contactor, valve, brake, etc. with monitored and positively guided auxiliary contact	Cat. 2	60-90%	Depending on switching frequency	Average	b	Auxiliary output required for warning in case of detected malfunction Contactor and downstream actuators appropriately designed for safety application	
					High	c	As before	
						d	As before DC = 90 % due to a sufficiently high test rate with reference to the application	
Single-channel (SIL2) OSSD Output Qx.0 ...Qx.7,	Single-channel Contactor, valve, brake, etc. without direct feedback for diagnostics	Cat. 3	90%	Monitoring only in an external shut-off circuit	Medium or high	d	Contactor and downstream actuators suitably designed for safety application	
	Single-channel Contactor, valve, brake, etc. with monitored positive-guided auxiliary contact	Cat. 4	99%	Monitoring in both external shut-off circuits	High	e	Contactor and downstream actuators suitably designed for safety application Monitoring of electro mechanical components via positively guided switches, position monitoring of switching valves, etc.	

Single-channel (SIL2) Auxiliary outputs	Two-channel Contactor, valve, brake, etc. with direct feedback for diagnostics at least in one channel or Actuator actuated in a single channel with safety function Cat. 3 (e.g. STO)	Cat. 2	90%	Monitoring only in an external shut-off circuit	Average	c	Auxiliary output required for warning in the event of detected malfunction Contactor and downstream actuators suitably designed for safety application	Short-circuit of external control
					High	d		

Single-channel with dynamic testing (SIL3) Qx.0 ...Qx.7, Qx.8_PP ...Qx.11_PP	Two-channel Contactor, valve, brake, etc. with direct feedback for diagnostics in both channels or Actuator with safety function Cat. 4 (e.g. STO)	Cat. 4	99%	Monitoring in both external shut-off circuits	High	e	Contactor and downstream actuators suitably designed for safety application Monitoring of electro mechanical components via positively guided switches, position monitoring of switching valves, etc.	
Two-channel without dynamic output test (SIL2) Qx.y_R1 and Qx.y_R2 2 outputs each Qx.0 ...Qx.7, Qx.8_PP ...Qx.11_PP Q8x.8_P and Qx.9_N, Q8x.10_P and Qx.11_N	Two-channel Contactor, valve, brake, etc. with direct feedback for diagnostics at least in one channel or Actuator with safety function Cat. 4 (e.g. STO)	Cat. 3	90%	Monitoring in both external shut-off circuits	Medium or high	d	Contactor and downstream actuators suitably designed for safety application Monitoring of electro mechanical components - via positively guided switches, position monitoring of switching valves, etc. Time-shifted control at PLC level	Short-circuit of external control
Two-channel QR0 and QR1 or Two-channel with dynamic output test QR0L_PP, QR0_PN, QR1L_PP, QR1_PN	Two-channel Contactor, valve, brake, etc. with direct feedback for diagnostics in both channels or Actuator with safety function Cat. 4 (e.g. STO)	Cat. 4	99%	Monitoring in both external shut-off circuits	High	e	Contactor and downstream actuators suitably designed for safety application Monitoring of electro mechanical components via positively guided switches, position monitoring of switching valves, etc. For applications with frequent requests for safety shut-off, tests must be performed with short time intervals, e.g. at the start of a shift, 1 x per week. However, as a minimum, a test should be performed at least cyclically 1 x per year.	Short-circuit of external control in both channels

11. Commissioning and start

The assembly can only be used after it has been programmed.
For programming, please observe the Programming Manual.

DANGER



Work on the wiring or work at the electrical system can cause electric shock. Electric shock can cause death. Thus, only persons qualified according to TRBS 1203 may carry out work on the wiring or work on the electrical system.

11.1. Switch-on sequence

If the assembly runs correctly, after every restart of the assembly the following phases are passed through. The respective phases are indicated on the 7-segment display on the front side of the assembly.

7 segment display	Mode	Description
„1“	STARTUP	Synchronization between the two processor systems and check of the configuration data / check of the firmware data
„2“	SENDCONFIG	Distribution of the configuration data / Configuration of the firmware data, and second check of these data. Afterwards range check of the configuration data.
„3“	STARTUP BUS	If available, initializing of a bus system.
„4“	RUN	Standard operation of the system, All outputs are are switched according to the current state of the logic.
„5“	STOP	In the Stop mode, parameter data and program data can be loaded externally.
„6“	Error	Error mode of the assembly. All outputs are switched off. Error can only be reset via ON / OFF of the assembly.
„7“	Alarm	Alarm mode of the assembly. All outputs are switched off. Alarm can be reset either via digital input or via the acknowledge button that is situated on the front side.
„8“	Local mode	Local mode of the assembly. Normal mode without network connection.

Table 4: 7-segment display

11.2. Reset behaviour

The Reset function differentiates into a start-up function after voltage recovery (= General Reset) and a status reset / alarm reset (= Internal Reset). The latter is triggered via the button at the front side or via an appropriately configured input (= Reset element) with enabled "Alarm reset" function. The following table offers a survey of the Reset functions and of the effects of the Reset functions.

11.2.1. Types of Reset and triggering events

Reset type	Trigger element	Remark
General Reset	Voltage recovery / device start-up	Reset function after the device has been completely switched off and switched on.
Internal Reset	Front -side Button of device	Triggering of the internal reset by means of Reset button on the front-side
	Reset input	Configuration of a Reset input „Start / Reset"

Table 5: types of Reset

11.2.2. Timing of Reset

In the RUN mode, the Reset input for internal Reset is monitored with respect to time. Under the condition T ≤ 3 sec between the rising edge / the falling edge, an Internal Reset is triggered with the falling edge of the Reset input.

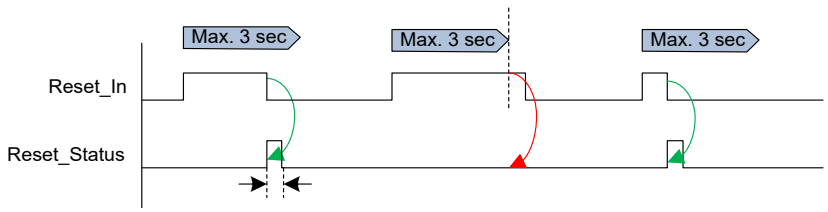

Fig. 35: Timing of Reset

NOTICE

- For time-based functions, the condition T ≤ 3sec is only possible by using a block reset.
  see Programming Manual

11.2.3. Reset functions

Function unit	General Reset	Internal Reset	Function
Fatal Error	X		Error reset
Alarm	X	X	Alarm reset
Monitoring functions	X	X	Reset of an addressed monitoring function
Flip-Flop	X	X	Status = Reset
Timer	X	X	Timer = 0

Table 6: Reset functions

After a Reset, the status of the monitoring functions is newly formed.

- ⇨ When exceeding the parametrized limits, process values do not change the initial status of the monitoring function
- ⇨ Time-based function timers provoke a reset of the initial status of the monitoring functions. A response only takes place if the parametrized limit values are once more exceeded.

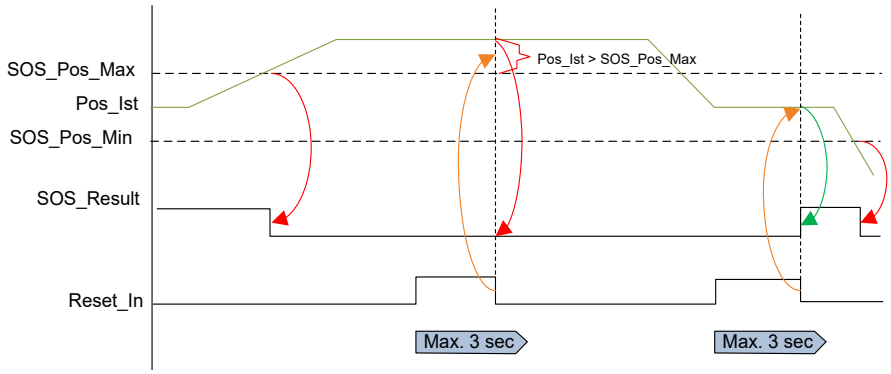

Fig. 36: Reset function 1

Process value (position) => no change of output status at Reset during alarm status

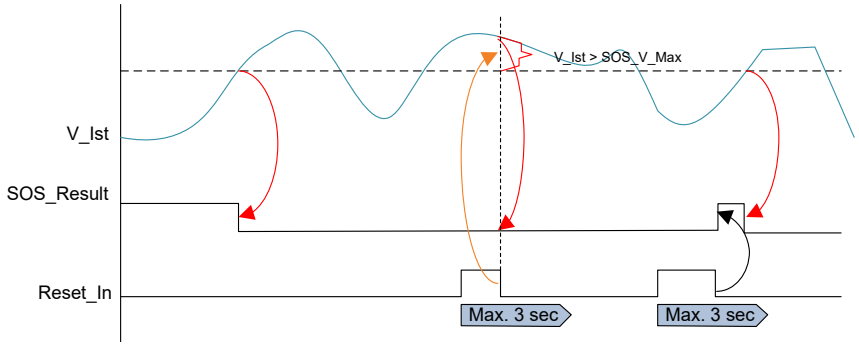

Fig. 37: Reset function 2

Process value (speed) =>no change of output status at Reset during alarm status

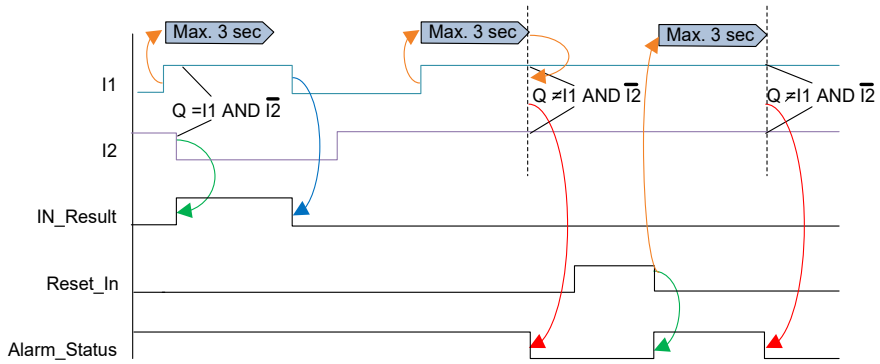

Fig. 38: Reset function 3

Time-based function => reset of output status if limit is exceeded again

NOTICE	• In case of time-based functions (e. g. time monitoring of complementary input signals), the input status is reset. In this case, a status defined as faulty is detected only if the (time) limit value is exceeded again. • As protective measures against unintended use (e. g. repeated triggering of the Reset function to bypass an alarm status, if need be, applicative measures must be taken in PLC programming.

11.3. LED displays

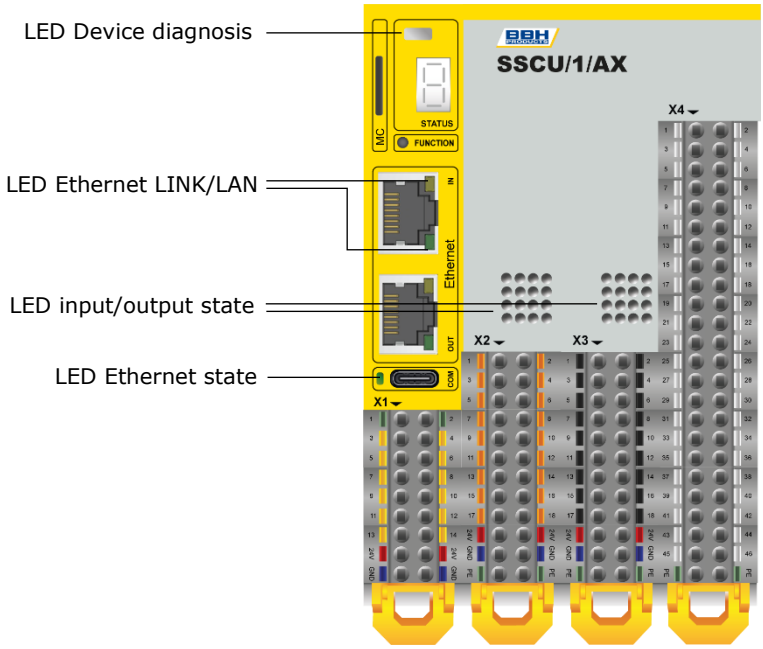

Overview	Paramter	Description
LED device diagnosis	Green/Orange/Red	Status display
LED Ethernet state	Green/Red	1 LED
LED Ethernet LINK/LAN	Green/Yellow	2 LED per Ethernet
LED I/O input/output state	Green	1 LED per I/O for input or output
LED voltage supply	Green	1 LED

Table 7: LED displays, overview

11.3.1. LED device

STATUS	Color	Flashing pattern	Meaning
	-	Off	No power supply voltage
	Orange	Flashing	Control is in startup phase, or STOP, or firmware update is carried out.
	Orange	Permanent light	Assembly in local mode (without network connection)
	Green	Blinking	Control function correct; applicatoin runs, but has not (yet) been validated.
	Green	Permanent light	Control function correct; application runs and is validated.
	Red	Blinking	Alarm (application error) – the assembly is in safe operating state. Error status can be reset
	Red	permanent light	Fatal error – the assembly is in safe operating state.

Table 8: LED device state

11.3.2. LED Ethernet state – EtherCAT, combination of STATUS and Error LED

EC ST	Color	Flashing pattern	Meaning
	Green	Off	Init
	Green	Flashing	PRE-OPERATIONAL
	Green	Single Flash	SAFE-OPERATIONAL
	Green	On	OPERATIONAL
	Red	Off	No error
	Red	Flashing	Invalid configuration
	Red	Single Flash	Local error:
	Red	Double Flash	Watchdog Timeout

Table 9: LED Ethernet state

11.3.3. LED Ethernet LINK/LAN - EtherCAT

L/A EtherCAT	Color	Flashing pattern	Meaning
	Yellow	Off	No link to EtherCAT master is available
	Yellow	On	Link to EtherCAT master is available, no activity on the bus
	Yellow	Flashing	Link to EtherCAT master is available with active data transmission

Table 10: LED Ethernet LINK/LAN

11.3.4. LED input/output state

I/O	Color	Flashing pattern	Meaning
	-	Off	Inputs and outputs inactive, LOW logic status
	Green	Permanently illuminated	Inputs and outputs are activated, HIGH logic status

Table 11: LED input/output state

NOTICE For all operating states except RUN, the displays are passivated by the firmware, i. e., the displays are safely disconnected. In the RUN status, the status of the plant depends on the implemented PLC program.

11.3.4.1. LED assignment

LED display (X2, X3)

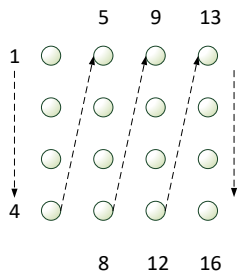

Input		Output	
LED	**Name**	**LED**	**Name**
1	I0.0	1	Q0.0
2	I0.1	2	Q0.1
3	I0.2	3	Q0.2
4	I0.3	4	Q0.3
5	I0.4	5	Q0.4
6	I0.5	6	Q0.5
7	I0.6	7	Q0.6
8	I0.7	8	Q0.7
9	I0.8	9	Q0.8_PP/_P
10	I0.9	10	Q0.9_PP/_N
11	I0.10	11	Q0.10_PP/_P
12	I0.11	12	Q0.11_PP/_N
13	I0.12	13	Q0.12_R1 (Relay1)
14	I0.13	14	Q0.14_R2 (Relay 2)
15	I0.14	15	-
16	I0.15	16	Voltage supply I/O

11.3.5. LED voltage supply

Color	Flashing pattern	Meaning
-	Off	
Green	Permanently illuminated	

11.4. Parametrization

Parametrization is performed via the program SafePLC^2.
To be able to send the data to an assembly, a programming adapter is needed. The driver of the programming adapter must first be installed by the user. Parametrization is described in the Programming manual.

11.5. Regular function test

To grant the safety of the assembly once a year a function test of the safety functions must be carried out. In this function test, the blocks (inputs, outputs, monitoring functions and logic modules) must be tested with respect to their function, or rather, with respect to their disconnection.

11.6. Validation

Each safety function must be validated after implementation to ensure its correct functioning and reliability. A validation of safety functions takes place at different levels and is explained in more detail by the EN 13849-2 standard:

- Validation of the safety function in the programming tool
- Additional validation of the safety function on the finished machine
- Carrying out of function tests with respect to the diagnostics measures and with respect to the shut-off functions in the event of a fault or a failure
- Carrying out of error detection procedures. Thus, also correct wiring of the machine can be tested.

In addition to functional testing, the validation of safety-related controllers also includes a detailed analysis and, if necessary, error simulations. This analysis should be performed at the beginning of the design process to enable the identification of problems at an early stage.

The scope of the analyses and tests carried out as part of the validation depends on the complexity of the controller and its integration into the machine or system.

A validation plan must be created for the validation. Depending on the complexity of the controller or machine to be tested, this plan contains the following information:

- Requirements for the implementation
- Operating conditions and ambient conditions
- Basic and reliable safety principles
- Reliable components
- Error presumptions and error exclusions
- Applied analyses and applied tests

To preserve the capacity of safety-relevant controls and to grant the safety, regular maintenance and repair with periodic tests is necessary. The periodic tests should be listed in the validation plan.

11.6.1. Procedure

To guarantee the functioning of the implemented safety functions, after start and parametrization, the user must test the parameters and the connections, and he must document the test. Test and documentation of the parameters and of the connections is suppurted by the software SafePLC^2 in the form of a configuration report.

The concept of the **SSCU** assumes the following basic conditions:
Parameter data and PLC data that are deposited in the flash of the **SSCU** cannot change on their own. This is ensured by online tests and the corresponding signatures in the course of basic measures.
Nevertheless, the configuration in itself cannot be rated by the **SSCU**. This concerns the parametrization of the sensors, of the threshold values and of the limit values.

To ascertain the correctness of the parametrization, the parametrization must be verified ba an expert. This verification corresponds to the validation.

After a successful start, the user must confirm that the data of the configuration report coincide with the parameters on the **SSCU**.

In the course of a function test the parametrized individual values for the calibration distance, the sensors and the monitoring functions must be verified and recorded by the user.

Furthermore, the programmed PLC functions must be verified and recorded by the user for every connection in terms of a code inspection. For this purpose, it is recommended to design the control so that the limit values of the **SSCU** can be tested.

11.6.2. Configuration report

The validation of the safety assembly is carried out by means of a configuration report.

11.6.2.1. Structure of the configuration report

The configuration report contains the following data:

- A header section that contains checksums and boxes to insert general project data
- A section with the list of the IL commands (PLC code)
- A survey of the inputs and the outputs used and of their parametrization
- All monitoring functions used and their parameters

11.6.2.2. Creating a configuration report

Via the connection dialog of the parametrizing software SafePLC^2 a configuration report of the connected device can be produced.

For the production of a configuration report, the necessary data are downloaded from the connected device, and are stored legibly in a *.pdf document. The user can determine the memory location while creating the document.

The respective boxes can be filled in directly in the PDF documents. Validation can also be carried out by means of a print of the configuration report.

11.6.2.3. Filling in the configuration report

The configuration report is filled in the following way:

- Enter the plant-specific data in the "Header" section. The plant-specifica data are informative, but their content and their volume should both be coordinated with the acceptance authority / with the tester.
- Set all hooks in the Header section if all displayed data (serial number, device type, CRC of the configuration) are identical with the data of the assembly.
- Validate the PLC user program and make sure that the code that has been filled in corresponds to the specific function.
- Set the hook in the inputs / outputs section for every entry that coincides with the rals connection of the **SSCU**.
- Set the hooks for all safety functions (e. g. SLS, SCA, etc.) if the set parameters coincide with the requirements.

NOTICE

- To create the configuration report for validation, the correct program data and the correct parameter data must be loaded.
- All listed parameter instructions and all listed program instructions must be validated at the plant / at the machine and must be confirmed in the configuration report.
- The tester must validate all configured data in the configuration report by checking all set limit values of the monitoring functions used are checked by means of a function test.

The practical procedure of validation should be carried out directly on the machine or plant to be protected. At least the following documents should be available for the validation:

- Operating instructions of the machine or plant with warnings
- Circuit diagram of the entire control system
- Documentation of the planning of the safety-related part of the plant as described above.
- Configuration report in electronic or printed form

The specific procedure should be based on the following guidelines:

a. The connected components such as control devices, sensors and actuators should be checked for correct connection. This check should be done primarily by actuating / stimulating the sensors and checking in the status display (diagnostics) of the safety controller.
b. When using diagnostic functions e.g. pulse assignment, a check should be carried out e.g. by short-circuiting him pulses etc.
c. If safety functions are used which are based on speed and/or position data, the correct recording of the speed or position must first be checked. The check is possible e.g. by the diagnostic function for speed and position which can be selected in the **SafePLC²**. Here the displayed velocity / position is to be checked by a physical measurement with a suitable device. This test must be carried out in any case and is a prerequisite and cannot be replaced by a theoretical test.
d. It is recommended to also check the diagnostics of the speed and position sensors. This can be done, for example, by disconnecting a sensor or a track of a sensor.
e. The logic functions should be checked in relation to the planning specifications. This should be done primarily by appropriate stimulation of the inputs etc. and the effect checked e.g. activation of a monitoring function or also deactivation of an output.
f. The set parameters of monitoring functions should not only be checked for compliance with the planning specifications, but also as far as possible by exceeding the parameterized limit value and observing the reaction.

12. Safety inspection

To ensure the functioning of the implemented safety functions, after start and parametrization the user must check the parameters and the connections, and he must document the check. Check and documentation are supported by the software **SafePLC²** (cf. Programming manual).

On the first two pages of the validation reports, general details concerning the plant can be entered.
On the following pages of the validation report, all functions used are printed with their parameters as itemization of the safety inspection.

After the configuration data and the program data have been transmitted to the SSCU assembly, the status LED blinks yellow. This indicates that the configuration has not yet been validated.

Upon confirmation by clicking the "LOCK CONFIGURATION" button at the end of the validation dialog, the data is marked as "Validated" and the status LED indicates the "Validated" state. (See Device diagnostics - LED).

13. Maintenance

The SSCU assembly is maintenance-free.

14. Failure and troubleshooting

If the SSCU assembly does not work properly, it autonomously changes into the safe status and displays the fault state via LED (cf. chapter 11.3 LED displays).
Please, check the displayed error code (7-segments display) by means of the SSCU error list (error codes and measures).
Should it not be possible to eliminate the error status, please contact the manufacturer immediately (cf. "Manufacturer").

15. Replacing an assembly

DANGER



Work on the wiring or work at the electrical system can cause electric shock. Electric shock can cause death. Thus, only persons qualified according to TRBS 1203 may carry out work on the wiring or work on the electrical system.

Repair

Assemblies must always be replaced completely.
Repairs can and may only be carried out in the factory.

Warranty

Warranty expires if the assembly is unduly opened.

NOTICE If the assembly is modified, the safety authorisation expires!

NOTICE When changing an assembly, you should proceed as follows:

- Disconnect the current converter(s) from the main supply
- Switch off the power supply for the device and disconnect the connection
- Unplug the encoder plug.
- Remove all other pluggable connections.
- Take the assembly off the top-hat rail and pack it according to EMC standards.
- Fix a new assembly on the top-hat rail.
- Restora all connections.
- Switch on the current converter(s).
- Switch on the power supply.
- Configure the device.

16. Decommissioning / disassembly / disposal

DANGER



Work on the complete plant and work on the SSCU may only be carried out by a trained electrician. This trained electrician must be a qualified person according to TRBS 1203. Before disassembly the machine must be in rest position. Power supply must be completely switched off and completely disconnected.

In case of final decommissioning, the whole plant must be secured mechanically. Afterwards, the plant and its components must be marked so that recommissioning is not possible. Decommissioning must be mentioned in the documentation.

After its final decommissioning, the complete plant can be disassembled.
The plant and their components (e. g. the joining module) contain valuable raw materials. Thus, the plant and its components must be recycled separately by an appropriately specialised company.

Disassembly Is carried out analogous to chapter 15 “Replacing an assembly”.

Disposal:

NOTICE:
Please observe tne national regulations concerning the disposal of electrical devices.



The symbol of the crossed out garbage bin signifies that electric devices and electronic devices including their accessories must be disposed of separate from domestic waste.
The materials are reusable according to their label(s). By reusing or recycling materials or by other ways of recycling old equipment, you make an important contribution to the protection of our environment.

If necessary, dispose of the components separately according to their nature. Always dispose of the components according to the regulations valid in the respective country, e. g. as:

- Electrical waste
- Artificial sheet metal
- Sheet metal
- Copper

17. Setting as EtherCAT Slave with TwinCAT3

Furthermore, in the EtherCAT network the FSoE Master must be parametrized as Slave. For EtherCAT Master by Beckhoff, this setting can be carried out with the program **TwinCAT3** (by Beckhoff).

The necessary steps are described hereafter.

17.1. Installing the program

First, the program must be installed completely.
For program installation, Beckhoff provides the following installation program:
TC31-Full-Setup.3.1.4020.0.exe

By calling up the program, the program is installed automatically.
Please follow the instructions and complete the installation.

17.2. Creating a new project / Creating a new EtherCAT network

First, the program TwinCAT3 must be started. The program TwinCAT3 can be started via the start menu.
START -> Beckhoff -> TwinCAT3

Afterwards, a new project (a network) can be created via the following path:
File -> New project -> TwinCAT XAE Project (XML format)

For this project, a name and a memory location must be specified.

The following window appears:

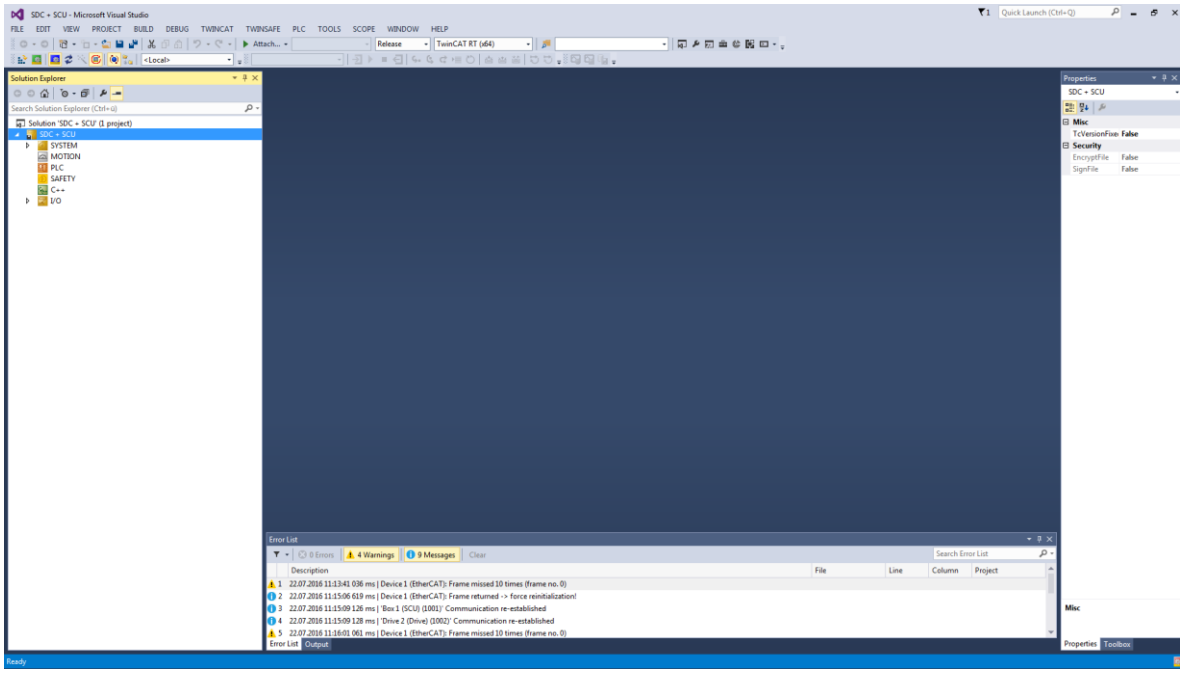

Fig. 39: starting TwinCAT

Please insert the real-time capable devices, and check the insertion via the menu **TWINCAT -> Show Realtime Ethernet Compatible Devices...**

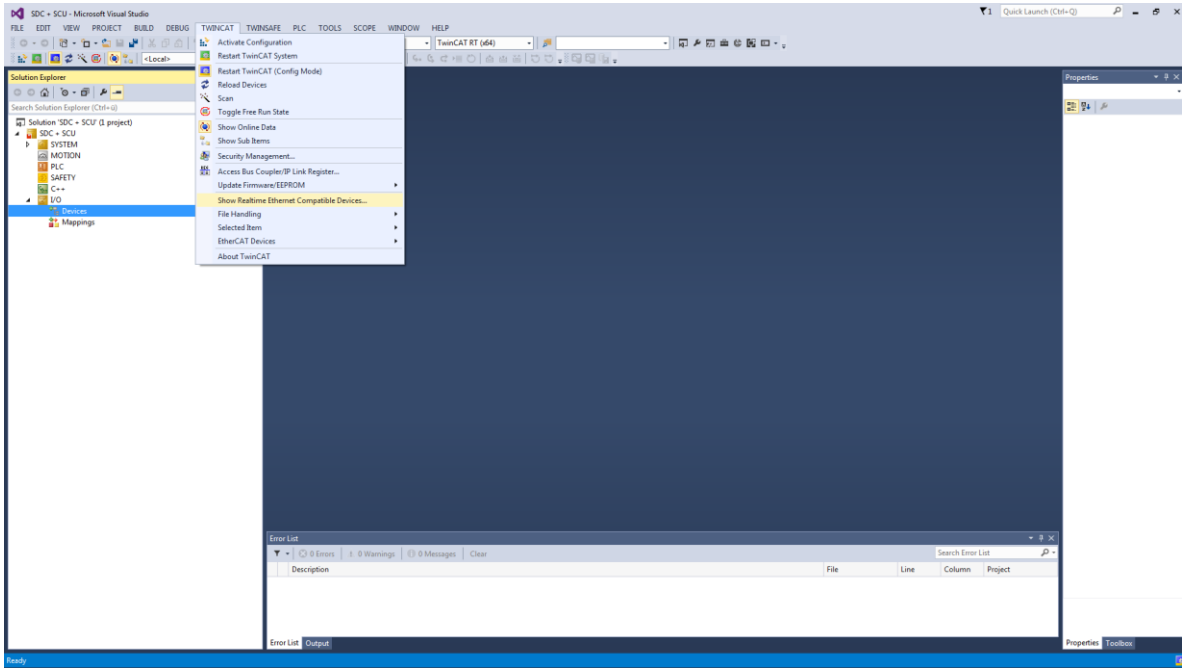

Fig. 40: TwinCAT – Geräte einfügen [TwinCAT - insert devices]

Please, first insert the EtherCAT Master.
To insert the EtherCAT Master, use the option "neue I/O-Geräte einfügen "[insert new I/O devices] via the following menu:
I/O -> Devices click< right mouse button> -> Add new items

There, please select the Master assembly.

Then the following window appears:

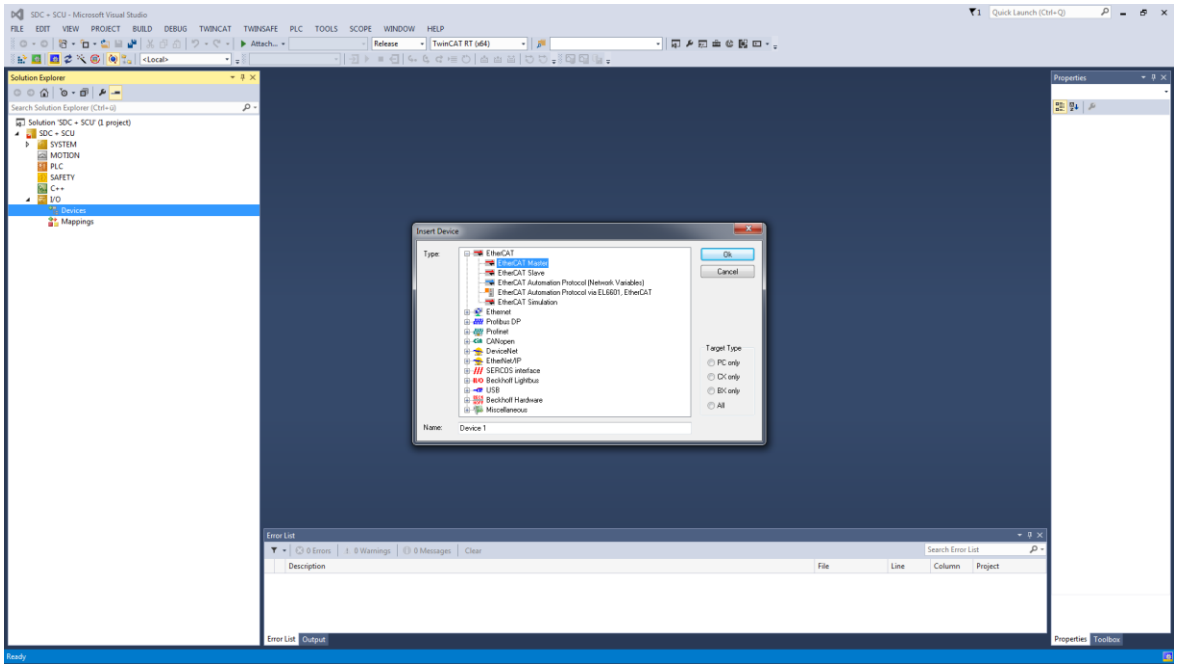

Fig. 41: TwinCAT - Master einfügen [TwinCAT – insert Master]

To insert EtherCAT Slaves (e. g. the assemblies manufactured by BBH), please use the menu **I/O -> Devices -> Device1 (EtherCAT) click <right mouse button> klicken -> Add new items -> BBH Products GmbH -> SSCU -> SSCU**

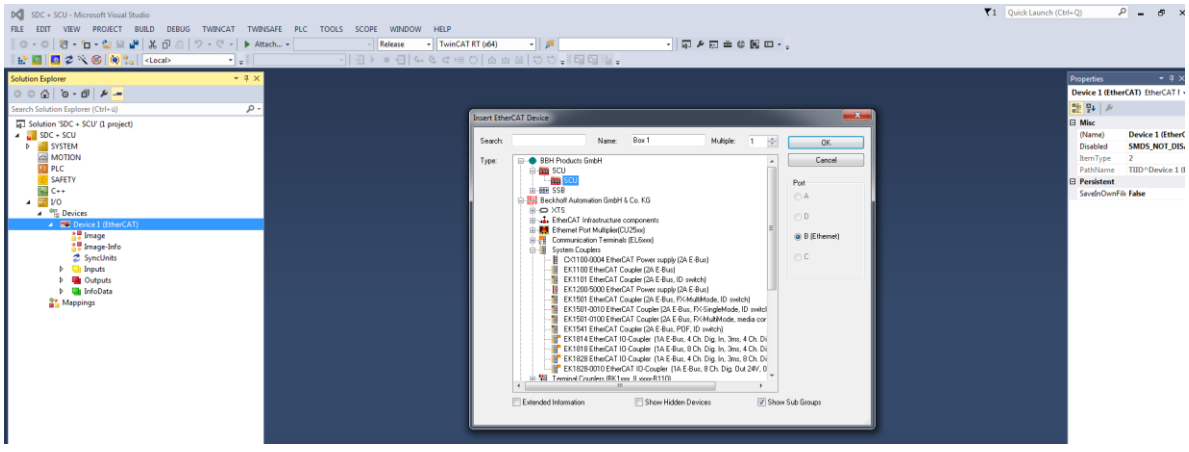

Fig. 42: TwinCAT – SSCU einfügen [TwinCAT - insert SSCU]

To insert additional EtherCAT Slaves, please use the menu – as shown with the example *LTi-Servo One CM – axle module*

I/O -> Devices -> Devices1 (EtherCAT) click <right mouse button> -> Add new items -> LTi DRIVES GmbH -> ServoOneCM -> 3 Axis module

The selected module is parametrized by inserting “Slots” in the SSCU assembly.
To insert “Slots” in the SSCU assembly, please <double click> on the SSCU assembly.
Select the Slot table and afterwards **10 Bytes In /10 Bytes Out** in Slot 1, Slot 2 and Slot 3.

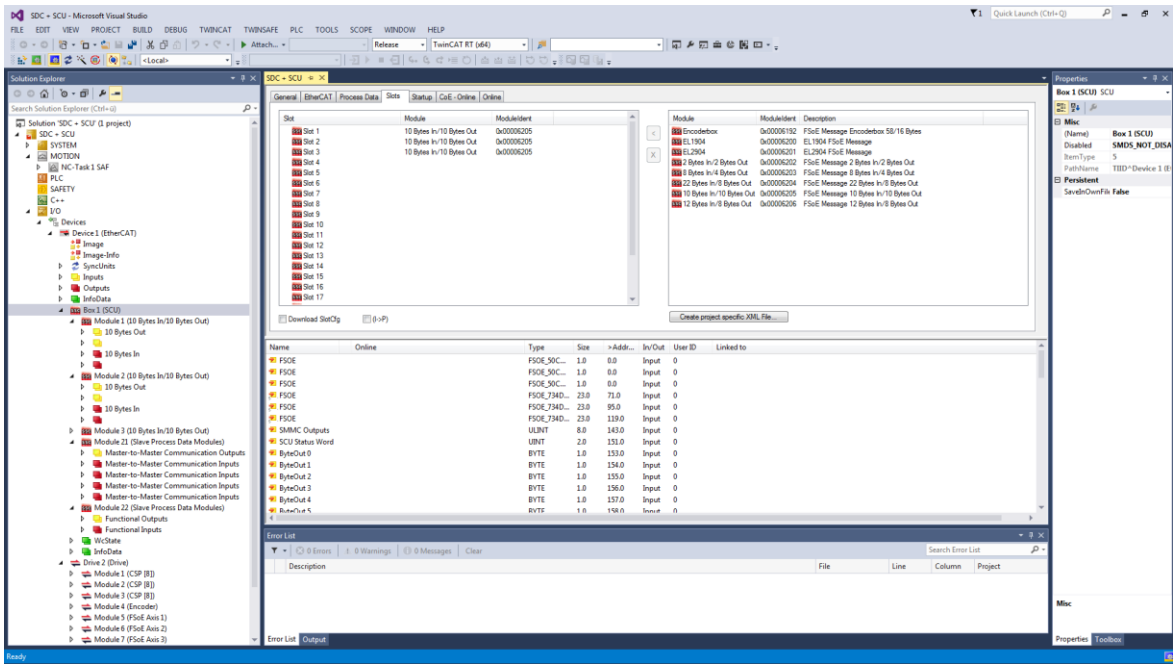

Fig .43: TwinCAT – IO devices

The respective Slots are parametrized via

I/O -> Devices -> Drive 2 (Drive) <double click> -> Process Data Tab -> PDO Assignment

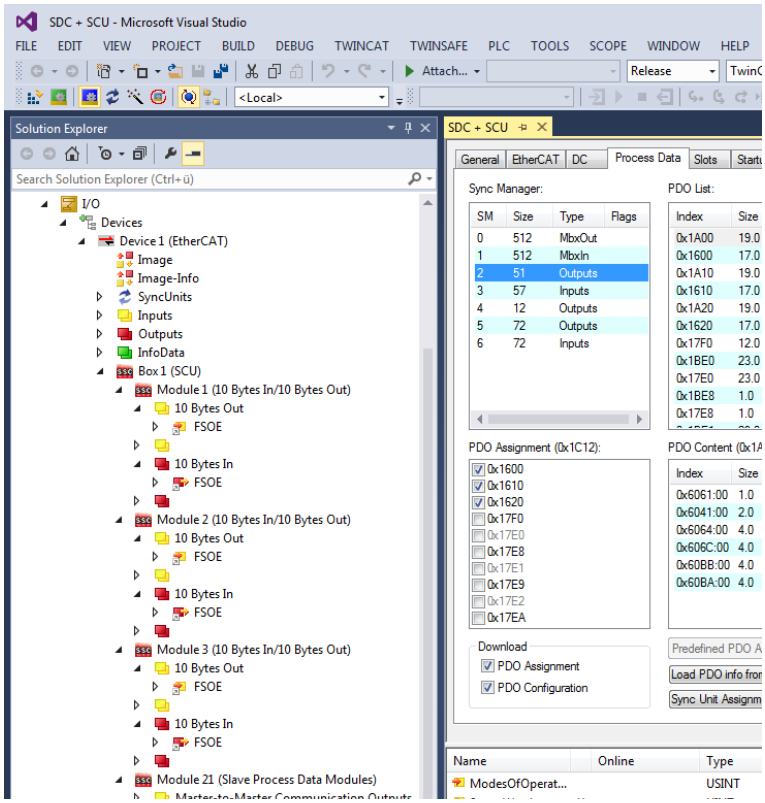

Fig. 44: TwinCAT – IO devices

There, the following settings must be made

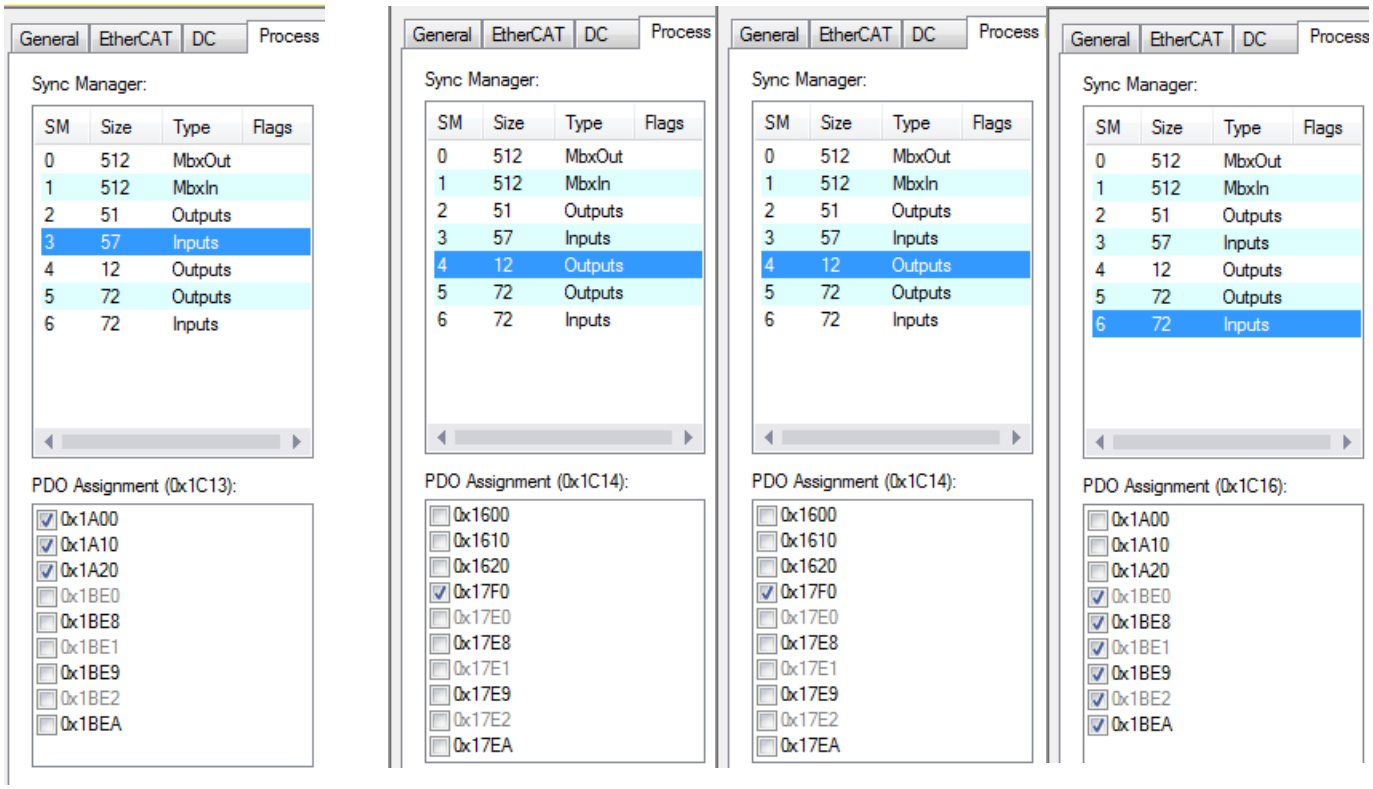

Fig. 45: TwinCAT – setting Slaves

The linking of the inputs and the of the outputs of the two devices must be set as follows:
Inputs from Box 1 (SSCU) < -> Outputs from Drive 2 (Drive)
Outputs from Box 1 (SSCU) < -> Inputs from Drive 2 (Drive)

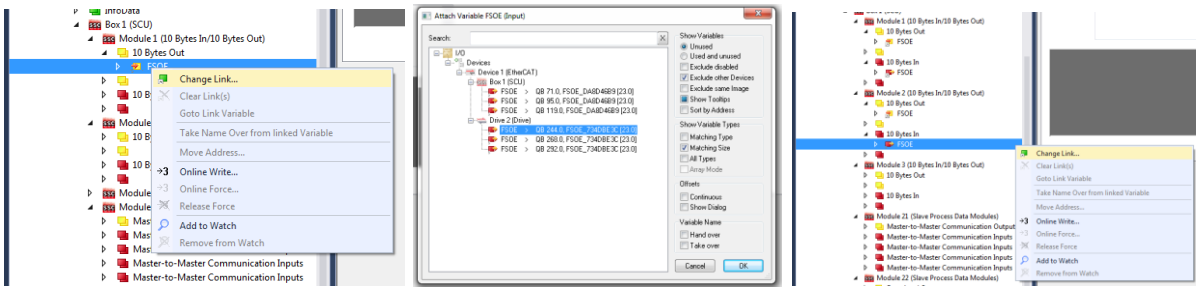

Fig. 46: TwinCAT - linking

The SSCU assembly is inserted via the menu:
SDC + SSCU **-> SYSTEM -> Tasks -> Add New Items**

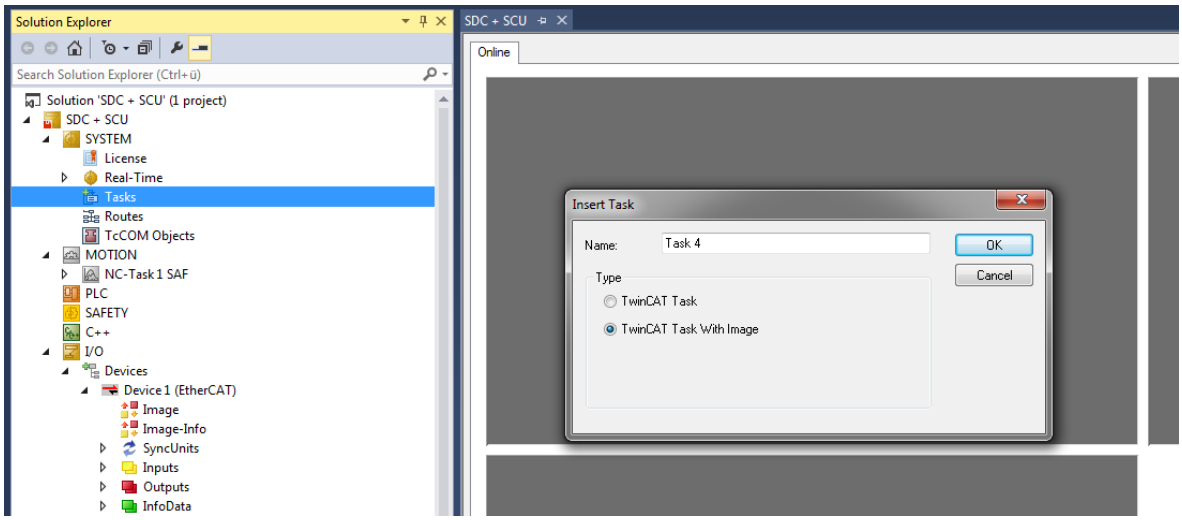

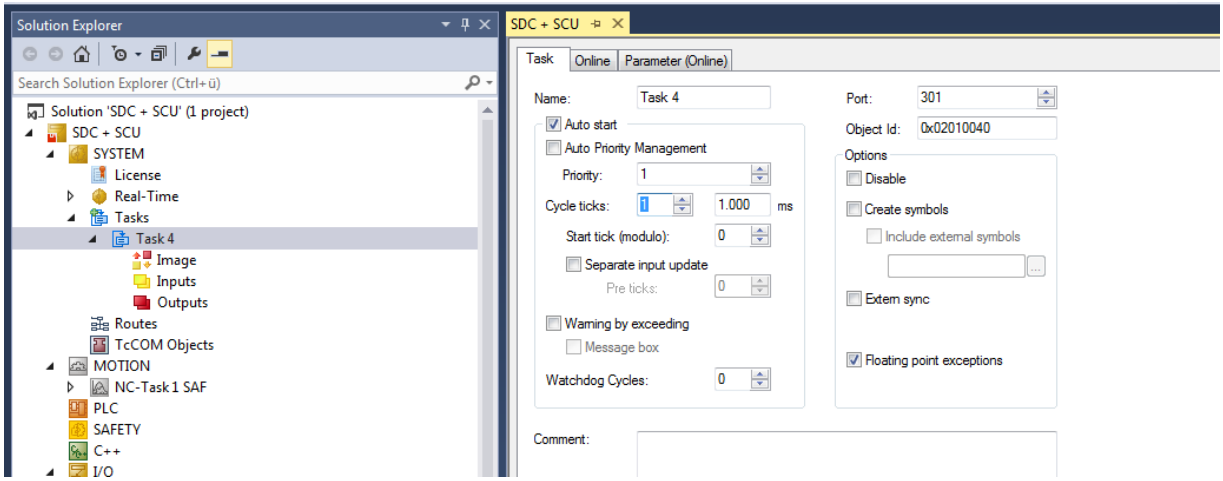

Fig. 47: TwinCAT – insert SDC

SDC + SSCU **-> SYSTEM ->Tasks -> Task 4 -> Inputs -> Add New Items**

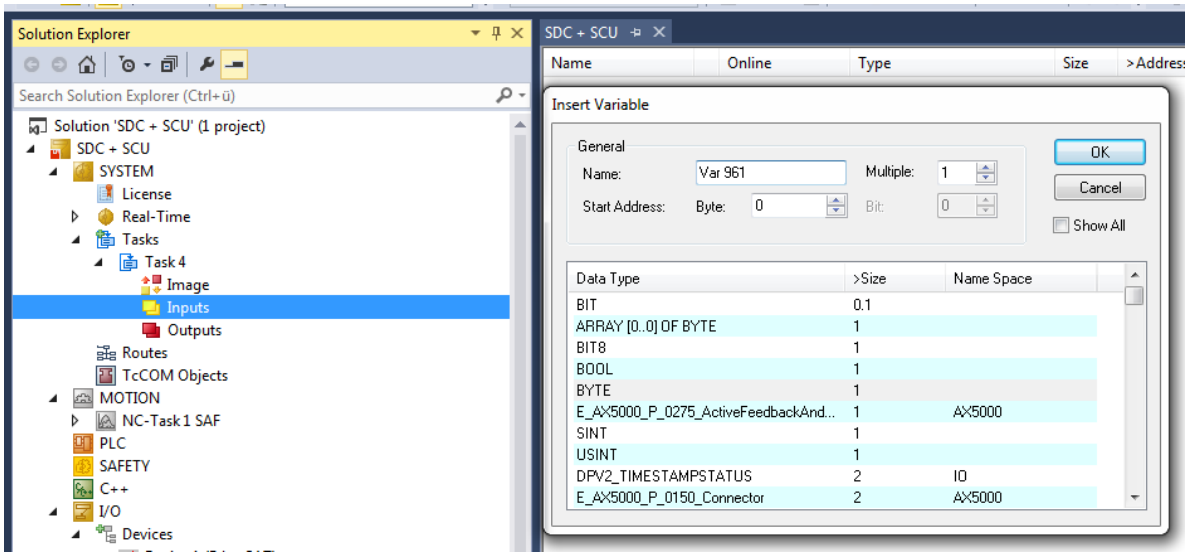

Fig. 48: TwinCAT - Task

The parameters are set via:
SDC + SSCU **-> SYSTEM ->Tasks -> Task 4 -> Inputs -> Var 961 -> Change Link.**

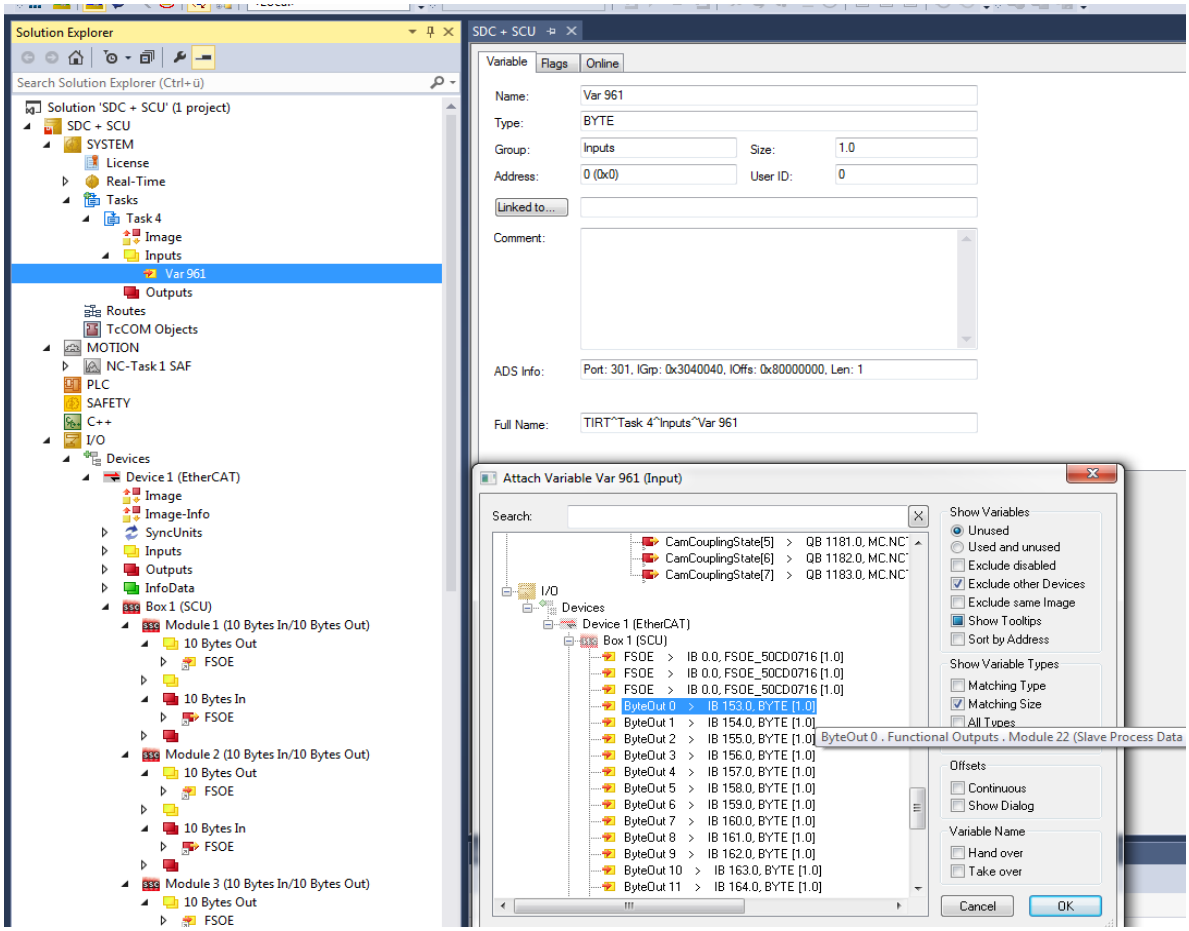

Fig. 49: TwinCAT connection

Setting the time parameters:

I/O -> Devices -> Device 1 (EtherCAT)

In the adapter table, the value for the Freerun Cyle must be set to 1ms.

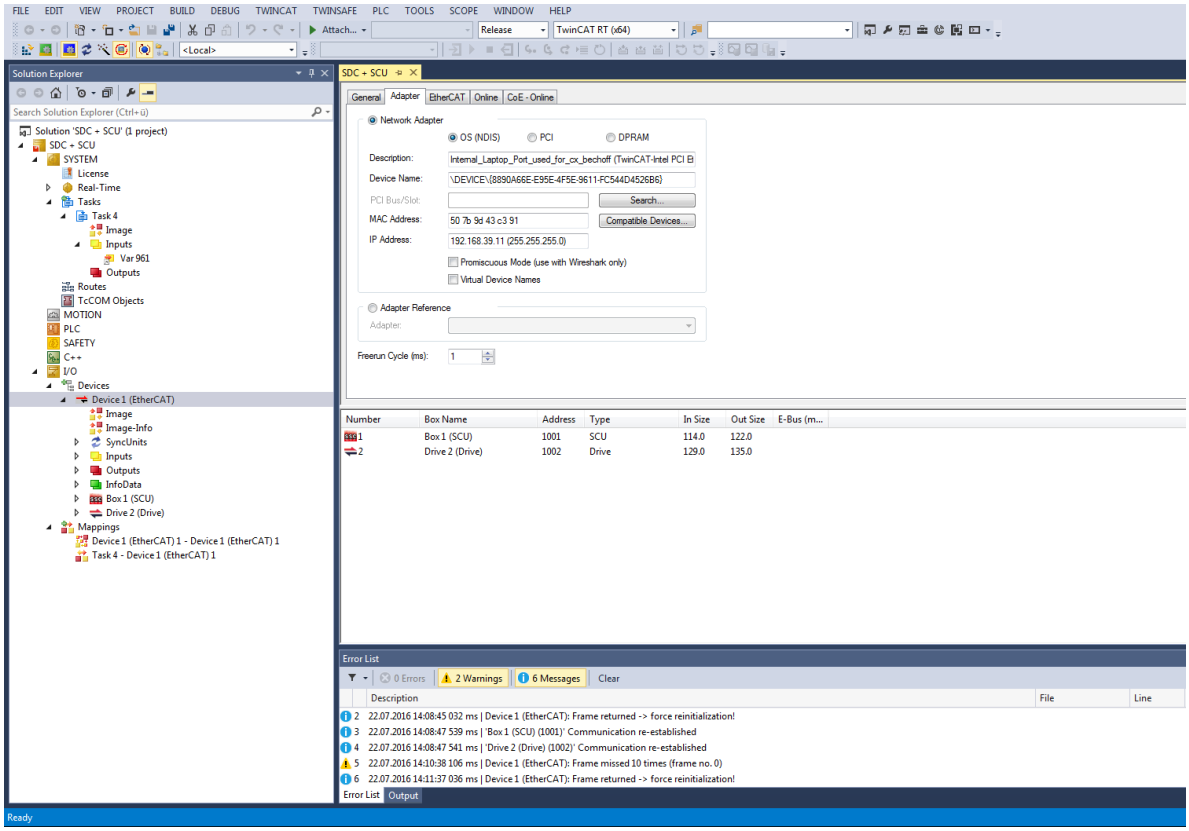

Fig. 50: TwinCAT – time parameters

Finally, please reload the device, and activate Free run. After that, the FSoE network is running ("RUN") and the devices must change to the "OP" status.

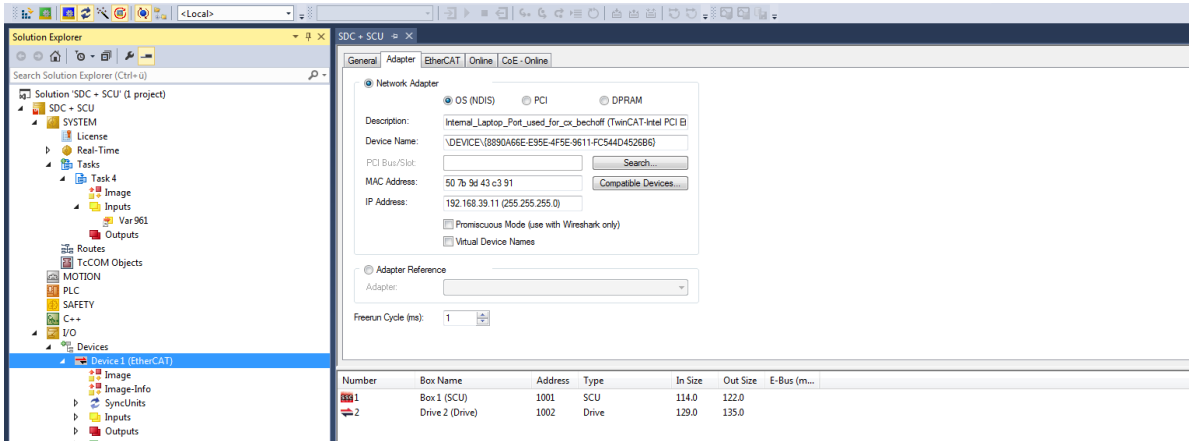

Fig. 51: TwinCAT – RUN

17.3. EoE settings in TwinCAT (EtherCAT settings)

To carry out the EoE settings, the virtual Ethernet Switch must be enabled (Enable Virtual Ethernet Switch):

I/O -> Devices -> Device1 (EtherCAT) -> Open the EtherCAT tab -> Advanced Settings… -> EoE Support

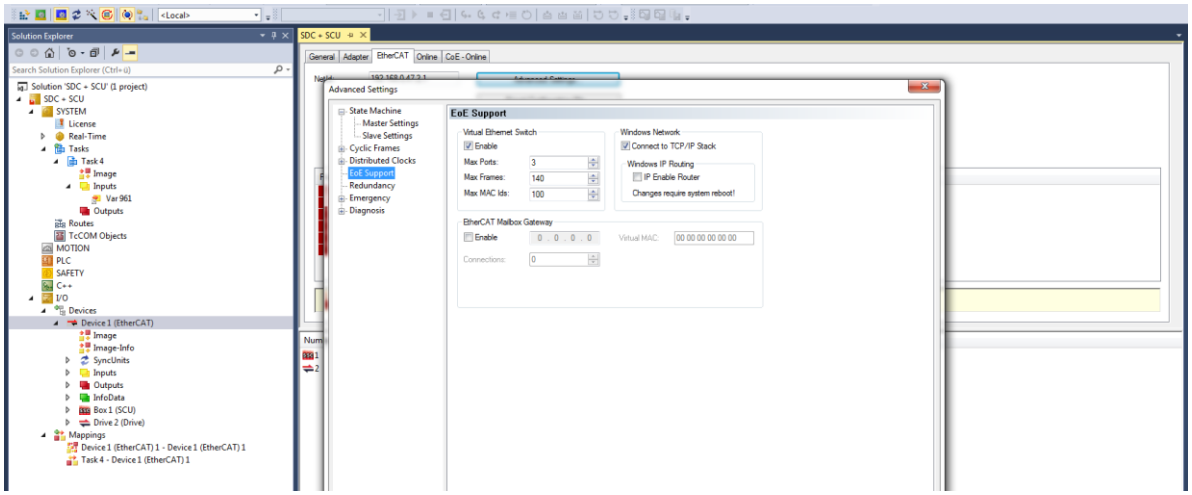

Fig. 52: TwinCAT – EoE settings

Then set the IP ports:

I/O -> Devices -> Device1 (EtherCAT) -> Drive 2 (Drive) and Open the EtherCAT tab-> Advanced Settings…-> Mailbox EoE

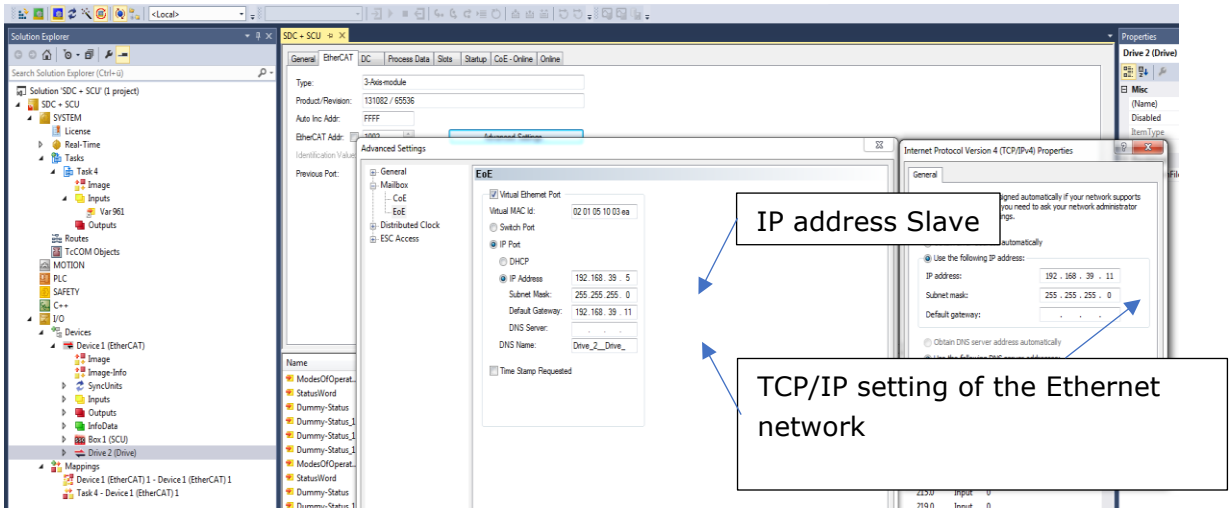

Fig. 53: TwinCAT – IP ports

Afterwards, the pinging (testing) of the Slave carried out (with FSoE being enabled):
RUN -> cmd -> ping 192.168.39.5

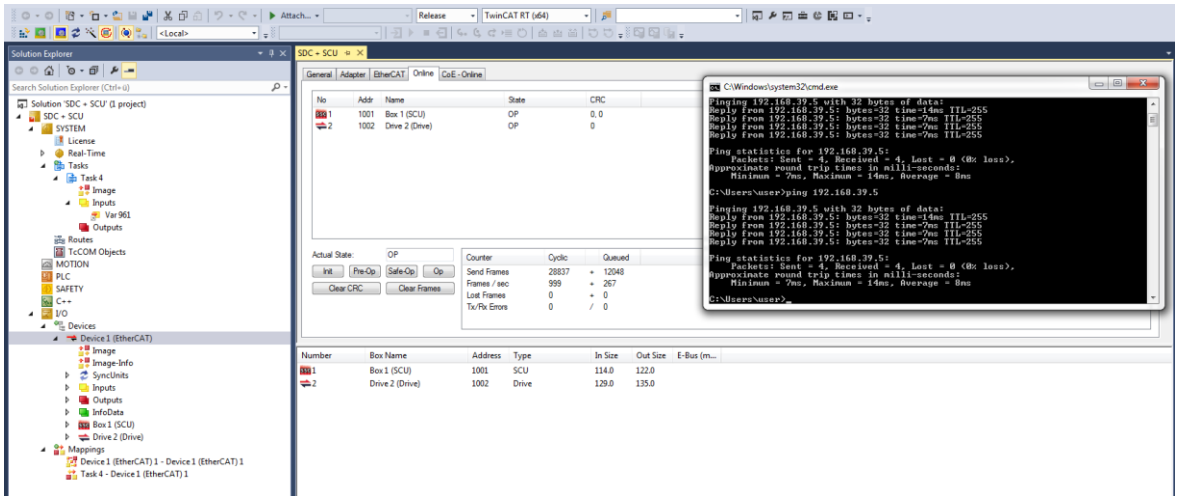

Fig. 54: TwinCAT – pinging of the Slaves

Finally, **SafePLC²** can be connected with the program, if FSoE is enabled.

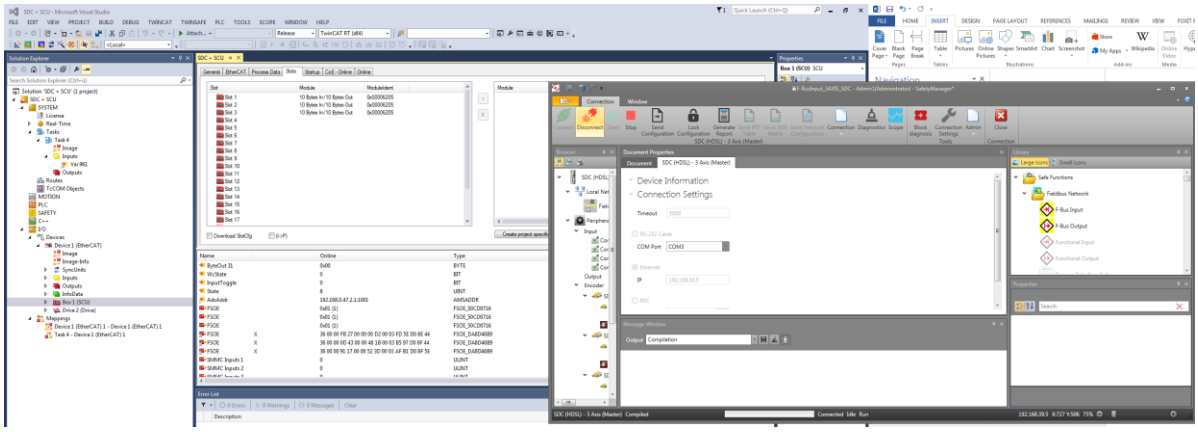

Fig. 55: TwinCAT + SafePLC2

18. Information for design, programming, validation and test

The following information describes the procedure for design, programming, validation and test of safety-related applications.
The information shall help the user to classify all steps from risk analysis to the system test, to easily understand these steps, and to apply these steps

18.1. Risk analysis

In principle, the manufacturer of a machine must warrant the safety of a machine he manufactured or delivered. For safety evaluation, the respective valid relevant directives and standards must be consulted. The objective of the safetyreview and of the measures resulting thereof must be to reduce danger to persons to an acceptable level.

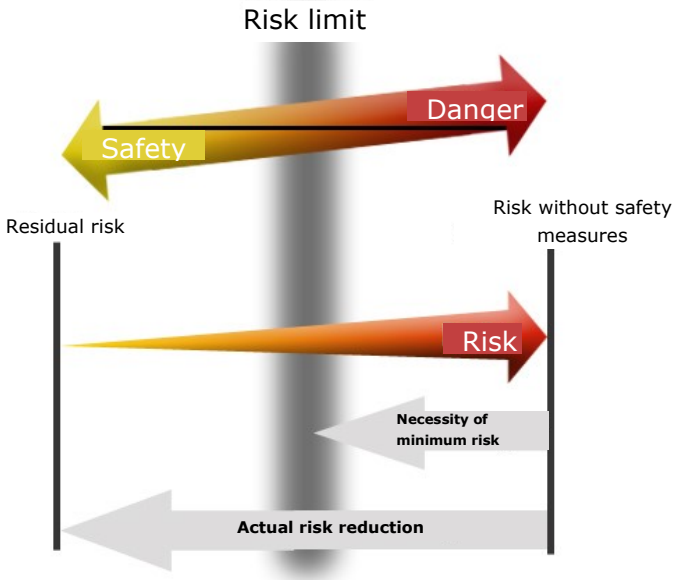

Fig. 56: risk analysis

The risk analysis must consider all operating conditions of the machine, e. g. operation, setting-up and maintenance or installing and decommissioning as well as forseeable misuse of the machine.
The necessary method for risk analysis, and the measures for risk reduction are contained in the relevant standards, e. g.

- EN ISO 13849-1 Safety of machinery
- EN ISO 61508 Functional safety of safety-related e/e/p e-systems.

Risk evaluation according to EN ISO 13849-1

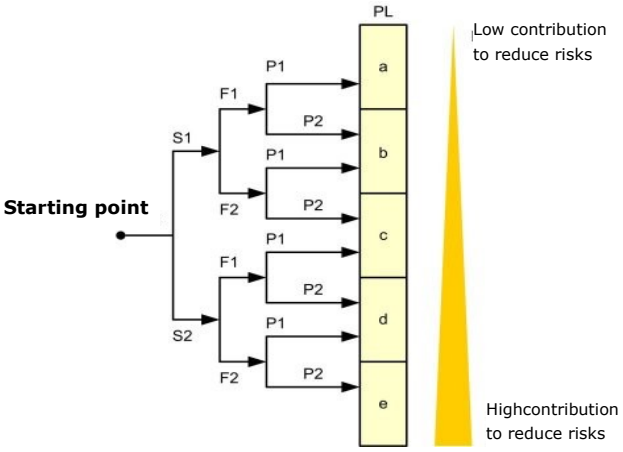

Fig. 57: risk graph according to EN 13849-1

S – Serve physical injury
S1 = minor, reversible injury
S2 = severe, irreversible injury

F – Frequency and/or duration of Exposure to danger
F1 = rarely, not cyclic
F2 = frequently up to permanent and / or long duration, cyclic operation

P – Possibility of risk prevention
P1 = possible, slow movement / slow acceleration
P2 = hardly possible, high acceleration in the event of fault

Risk evaluation according to EN ISO 61508

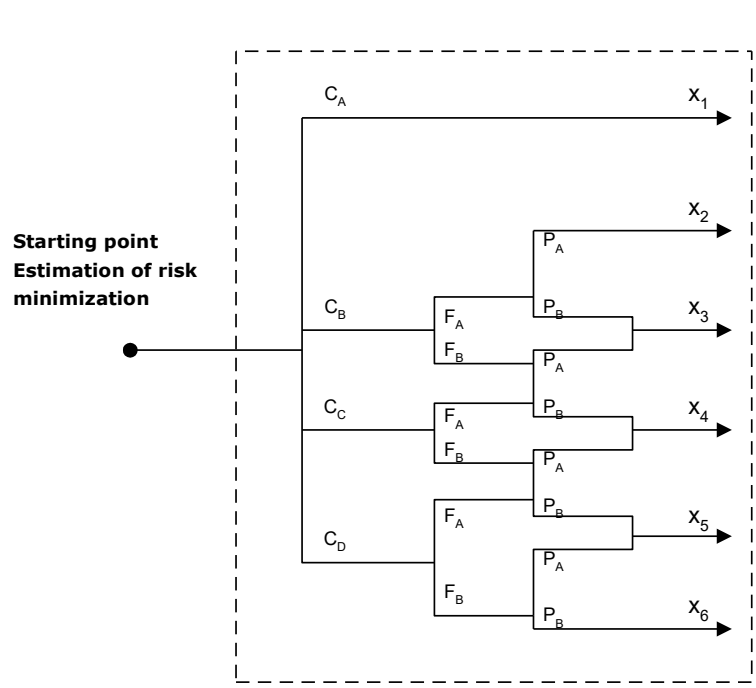

W3	W2	W1
a	---	---
1	a	---
2	1	a
3	2	1
4	3	2
b	4	3

- = no safety requirement
a = No special safety requirements
b = a single E /E /P E S is not sufficient
1,2,3,4 = Safety integrity level

C = Risk parameters of the effect
F = Risk parameters of the frequency of the dwell time
P = Risk parameters of the possibility to avoid the dangerous incident
W = Probability of the undesired event

The risks to be considered are also contained in the relevant directives or standards, or rather, the risks to be considered must be considered separately by the manufacturer due to his specific knowledge of the machine.

For machinery put into circulation within the EU, the minimum risks to be considered are specified in the EU Machine Directive 2006/42/EG, or rather, In the lastest version of this directive.

Further information concerning risk evaluation and the safe design of machinery is contained in the standards

- ISO/TR 14121-2 Safety of machinery – Risk assessment,
- EN 12100 Safety of machinery – basic concepts.

Measures applied to reduce identified risks must be at least on the same level as the risk. Such measures and the requirements for these measures are exemplified in the directives and standards mentioned above.

18.2. Necessary technical documents

Various technical documents must be supplied by the manufacturer.
Their minimum scope is also included in the relevant directives and standards.
For example, according to the EU Machinery Directive, the following documents must be supplied at a minimum:

1. The technical file shall comprise the following:
   a) a construction file including:
      - a general description of the machinery,
      - the overall drawing of the machinery and drawings of the control circuits, as well as the pertinent descriptions and explanations necessary for understanding the operation of the machinery,
      - full detailed drawings, accompanied by any calculation notes, test results, certificates, etc., required to check the conformity of the machinery with the essential health and safety requirements,
      - the documentation on risk assessment demonstrating the procedure followed, including:
        i) a list of the essential health and safety requirements which apply to the machinery,
        ii) the description of the protective measures implemented to eliminate identified hazards or to reduce risks and, when appropriate, the indication of the residual risks associated with the machinery,
      - the standards and other technical specifications used, indicating the essential health and safety requirements covered by these standards,
      - any technical report giving the results of the tests carried out either by the manufacturer or by a body chosen by the manufacturer or his authorised representative,
      - a copy of the instructions for the machinery,
      - where appropriate, the declaration of incorporation for included partly completed machinery and the relevant assembly instructions for such machinery,
      - where appropriate, copies of the EC declaration of conformity of machinery or other products incorporated into the machinery,
      - a copy of the EC declaration of conformity;
   b) for series manufacture, the internal measures that will be implemented to ensure that the machinery remains in conformity with the provisions of this Directive.

Fig. 58: technical documents according to the Machine Directive

Source: BGIA Report 2/2008

The documents must be easy to understand, and they must be written in the respective national language.

18.3. Necessary steps – design, realization and test

The implementation of plant components requires special diligence with respect to design, realization and test. Also for these aspects, guidelines are contained in the relevant standards (cf. EN ISO 13849-2 or rather, EN ISO 61508).
The effort for the implementation of plant components depends on the complexity of the task for plant components with safety functions.
When it comes to realizing such functions by means of safety-relevant control functions and safety-relevant monitoring functions, the SSCU series offers efficient support in the form of the system's architecture (architecture cat. 4 according to EN ISO 13849-1), and above all in the form of the programming language and in the form of tested safety functions. Programming takes place in FUP (function-plan oriented programming). FUP is the form of programming that is recommended in the safety standards. Furthermore, FUP meets the requirements of a programming language with a limited language range (LVL) for which essentially there apply simplification in documentation and in the test range.
In every case the single steps require careful planning and analysis of the methods and systems used. The particular steps must be documented in a well comprehensible way.

V model (simplified):

The implementation of safety-related function requires a structured method as it is exemplified in the V model that is recommended in the relevant standards. Subsequently, the method in case of applications with assemblies of the SSCU series is exemplified:

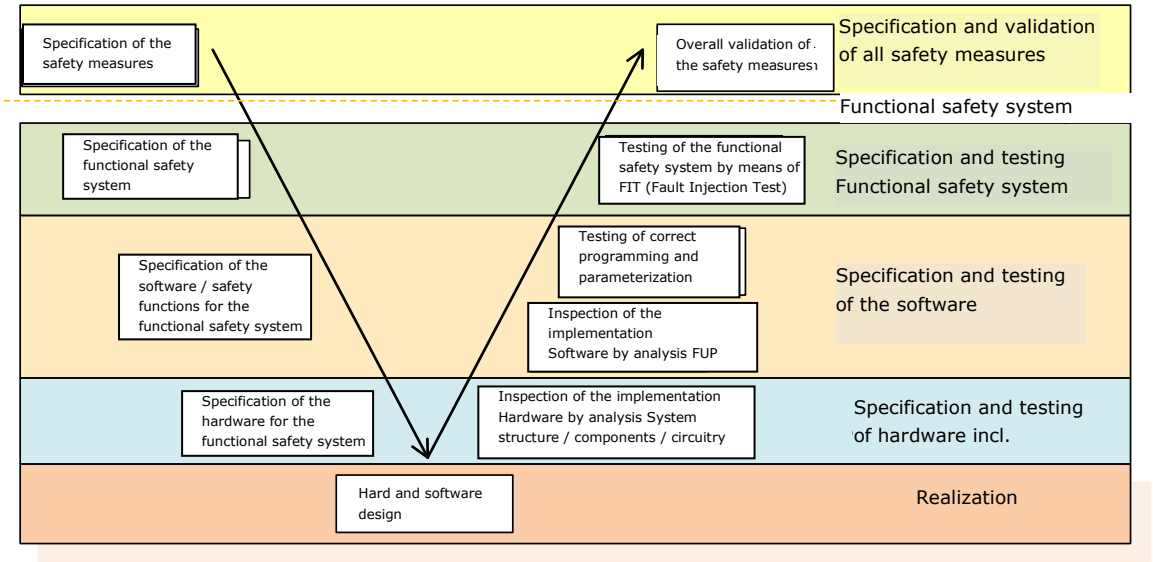

Fig. 59: V model

Phases of the V model:

Name	Description	
	Design phase	**Validation phase**
Specification and validation of all passive and all active safety measures.	Specification of all applicable safety measures, e. g. covers, enclosures, max. machine parameters, safety functions etc.	Checking of all passive and active safety measures for their proper implementation and effectiveness
Specification of the functional safety systems	Specification of the active safety systems an assignment of the active safety systens to the risks to be reduced, e. g. reduced speed in set-up mode, stop mode, monitoring of access areas etc. Specification of the PLr , or rather, of the required SIL for every particular safety function	Checking of all active safety systems for efficiency and for observance of the specified parameters, such as e. g. correct speed, correct stop, response of monitoring devices etc. by means of practical tests.
Specification of the software / specification of the safety functions	Specification of the functionality of the particular safety functions and definition of the de-energizing circuit etc. Definition of the parameters for the particular safety functions such as e. g. max. speed, stop ramps, and stop categories etc.	Checking of the correct implementation of the function specifications through analysis of FUP programming Validation of the application program and parameters by comparing the validation report with FUP or parameter specifications
Specifiation of the hardware	Specification of the plant structure and of the functions of the different sensors, control devices, control components ad actuators with respect to their safety functions	Verification of the correct implementation of the requirements. Determination of the probability of failure/PL by means of analysis of the overall architecture and the characteristic data of all components involved, in each case with regard to the individual safety functions
Hardware design and software design	Concrete planning and implementation of the plant structure / of the wiring. Concrete implementation of the safety functions by programming in FUP	Nil

Table 12: Phases of the V model

18.3.1. Specification of the safety requirements

On the basis of the standards to be observed, e. g. product standars, the safety requirements must be analyzed in detail.

1	**General product and project information**
1.1	Product identification
1.2	Author, version, date, document name, file name
1.3	Contents
1.4	Terminology, definitions, glossary
1.5	Version history and changes
1.6	Directives, standards and technical rules relevant to development
2	**Functional information on the machine, where relevant to safety**
2.1	Intended use and reasonably foreseeable misuse
2.2	Process description (operating functions)
2.3	Operating modes (e.g. setup mode, automatic mode, operation of localized relevance or of parts of the machine)
2.4	Characteristic data, e.g. cycle times, response times, overrun distances
2.5	Other characteristics of the machine
2.6	Safe state of the machine
2.7	Interaction between processes (see also 2.2) and manual actions (repair, setup, cleaning, troubleshooting, etc.)
2.8	Emergency operations
3	**Required Performance Level(s) (PL_r)**
3.1	Reference to existing documentation concerning the hazard analysis and risk assessment for the machine
3.2	Results of the risk assessment for each identified hazard or hazardous situation and specification of the safety function(s) required in each case for risk reduction

4 Safety functions (information applies to each safety function)

- Description of the function ("input – logic – output") including all functional characteristics (refer also to Tables 5.1 and 5.2)
- Activation/deactivation conditions or events (e.g. operating modes of the machine)
- Behaviour of the machine when the safety function is triggered
- Conditions to be observed for re-starting
- Performance criteria/performance data
- Process (timing behaviour) of the safety function, including response time
- Frequency of actuation (i.e. demand rate), recovery time following demand
- Other data
- Adjustable parameters (where provided)
- Classification and assignment of priorities in the event of simultaneous demand for and processing of multiple safety functions
- Functional concept for separation or independence/freedom of reciprocal action from non-safety functions and further safety functions

5 Required information for the SRP/CS design

5.1 Allocation of the SRP/CS and the form of technology by which the safety function is to be implemented; intended equipment

5.2 Selection of the Category, designated architecture (structure) in the form of a safety-related block diagram and description

5.3 Description of the interfaces (process interfaces, internal interfaces, user interfaces, control and display elements, etc.)

5.4 Behaviour at switch-on, implementation of the required starting and restarting behaviour

5.5 Performance data: cycle times, response times, etc.

5.6 Behaviour of the SRP/CS in the event of component failures and faults (achieve and maintain the safe state), including timing behaviour

5.7 Failure modes of components, modules or blocks which are to be considered; where applicable, reasoning for fault exclusions

5.8 Concept for implementation of the detection and control of random and systematic failures (self-tests, test circuits, monitoring arrangements, comparisons, plausibility tests, fault detection by the process, etc.)

5.9 Quantitative aspects

5.9.1 Target values for $MTTF_d$ and DC_{avg}

5.9.2	Switching frequency of components subject to wear
5.9.3	Frequency of measures for fault detection
5.9.4	Mission time, where different from the assumption upon which the intended architecture is based (20 years)
5.10	Operating and limit data (operating and storage temperature range, humidity class, IP degree of protection, resistance values for shock/vibration/EMC, supply data with tolerances, etc.)
5.11	Generic standards to be applied for design (for the equipment, for protection against electric shock/hazardous shock currents, for resistance to environmental conditions, etc.)
5.12	Technical and organizational measures for protected access to safety-related parameters and to SRP/CS characteristics (protection against tampering, access protection, program/data protection) and for protection against unauthorized operation (key switch, code, etc.), for example in non-standard operating modes
5.13	General technical requirements and organizational framework for commissioning, testing and acceptance, and for maintenance and repair

Fig. 60: safety requirements

Source: General guideline, excerpt from BGIA Report 2/2008 zu EN ISO 13849-1

18.3.2. Specification of the safety system

Based on the general hazard and risk analysis of the machine, the active protective functions must be identified and specified.
Active protective functions are, for example, safely reduced speed in certain system states, monitored stop and standstill functions, area monitoring, processing of monitoring devices such as light grids, switching mats, etc.
The safety functions must be differentiated in each case and the specific requirements defined in terms of function and safety level.

Definition of the safety functions

The definition of the safety functions must contain:

- Identification of the risk to be covered
- Description of the exact function
- Listing of all involved sensors, command devices
- Naming of all control units
- Naming of the triggered shut-off circuit

The definition is intended to serve as the basis for the hardware and software design specification.
The parameters that may be used, such as max. system speed in setup mode, etc., must be determined for each of the safety functions defined in this way.

Examples of safety functions:

- SF1: STO (Safe Turn-Off) to protect the plant from a safe start
- SF2: safe speeds
- SF3: safe positions
- SF4: …

Required Performance Level (PL r) (additional emergency stop)

Now, the required Perfolrmance Level PL r must be determined from the safety functions SF1… that have been recognized above.

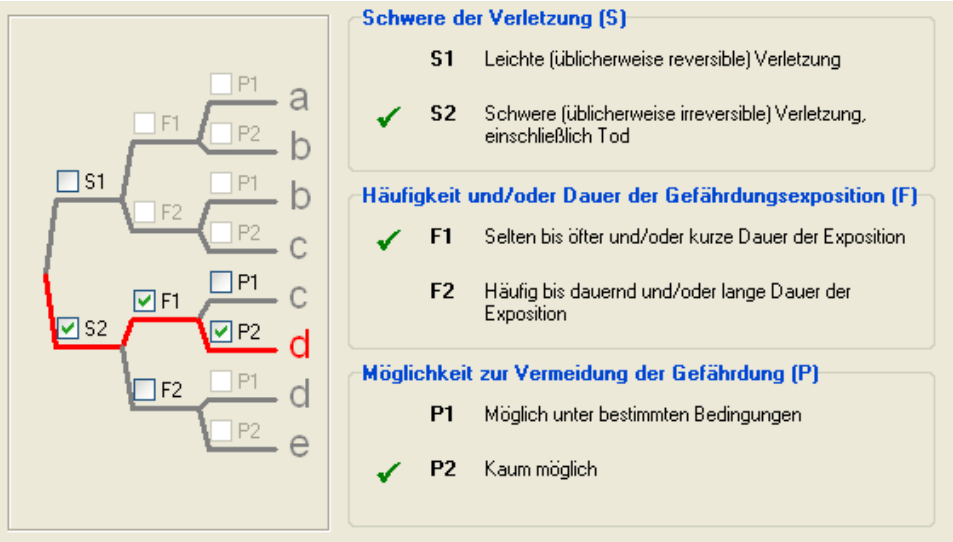

Fig. 61: Decision path acc. to SISTEMA

Example for SF1: result of PL r = d *(source SISTEMA)*

18.3.3. Software specification

The software specification refers to the preceeding specification of the safety functions. The software specification can also be replaced by an accordingly elaborated specification of the safety functions if this specification of the safety function contains all requirements (cf. the example under 12.3.3.3).

It is recommended to create an extracted list.
This extracted list should contain the following information:

- Designation of the safety function
- Description of the safety function
- Parameters if available
- Triggering event / operating state
- Reaction / output

The specification should be deatailed enough to be suitable for a later validation of the programming.

18.3.4. Hardware specification

In the hardware specification describes the complete plant structure, and especially the components used within the plant structure together with their specific identification data. The hardware specification serves as basis for the determination of the achieved safety level. The achieved safety level is determined on the basis of the architecture and of the identification data of all devices that participate in a safety function.
Furthermore, in the hardware specification also the constructive protective measures against systematic errors and Common Cause errors must be indicated.

18.3.5. Selection of the SRP/CS and selection of the equipment

For every safety function, the SRP/CS (Safety related parts of control system) must be selected in a way that is suitable to achieve the desired safety level for every safety function. In an overall survey of the plant structure, the components with security-related functions must be indicated, and they must be assigned to the particular safety functions. The safety indices of the components with security-related functions must be determined.

The safety indices include the following values:

MTTFd = mean time to failure (dangerous) = the mean time until the dangerous failure occurs)
DC avg = average diagnostic coverage range
CCF = common cause failure, failure due to a common cause

For an SRP/CS also the software and the systematic errors must be considered.

Basically, an analysis of the SRP/CS that ispart of a safety function must be carried out according the the scheme sensor / PES / actuator.



18.3.6. Consideration of systematic failures

Within the hardware specification also systematic failures must be considered.

Example of measures against systematic failures:
Loss of energy during operation: If the loss of energy is dangerous, the loss of energy must be considered like an operating state.

Measures of systematic failures according to DIN EN ISO 13849-9, appendix G.

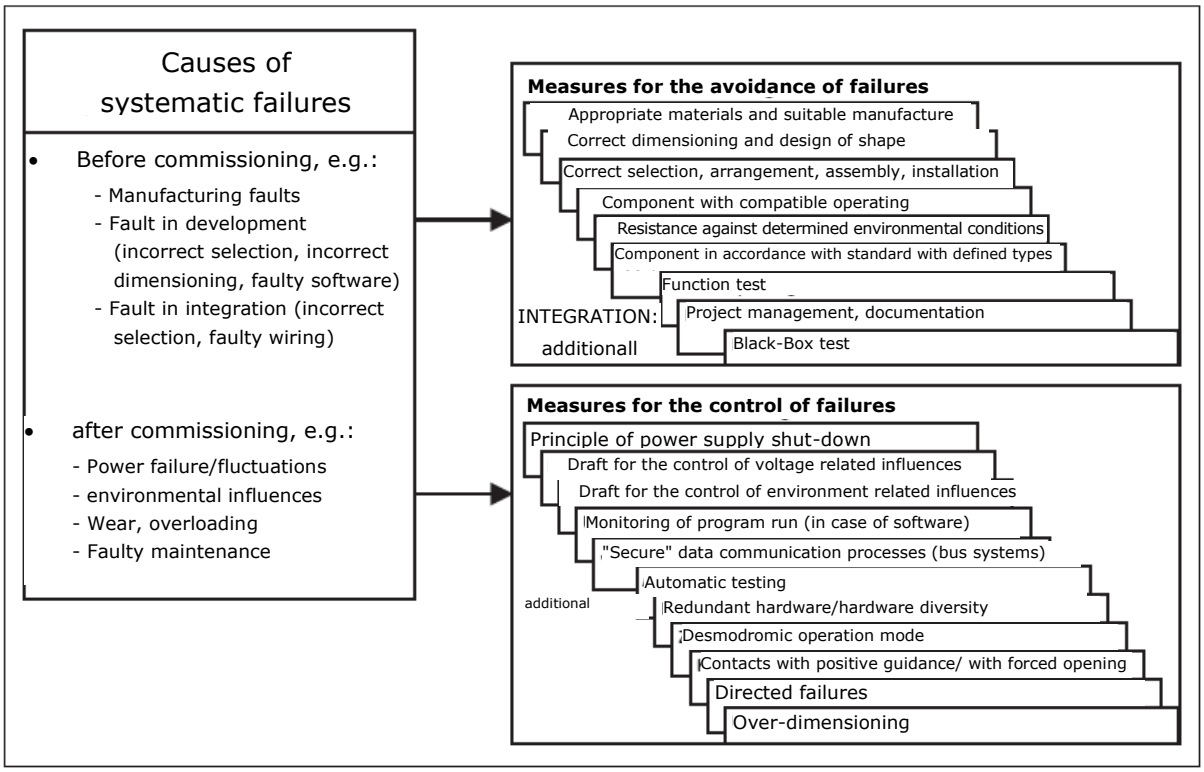

Fig. 62: Systematic failurese

Source: BGIA Report 2/2008

18.3.7. Fault exclusions

If fault exclusions are made for certain devices or for certain plant components, these fault exclusions must be named and specified in detail.
Fault exclusions can be e. g. mechanical shaft break, bonding of switch contacts, short circuits on cables, wires etc.
The legitimacy of the error exclusions should be substantiated, e. g. by references to the legitimate fault exclusions according to relevant standards, e. g. EN ISO 13849-1.

If particular measures are necessary for these fault exclusions, the necessary measures must be indicated.

Examples of fault excludions and assigned measures:

- Positive-locking connection in case of mechanical shaft connections
- Dimensioning on the basis of sufficient theoretical basics in case of fractures of components of the security chain
- Forced guidance in connection with forced separation of switch contacts
- Protected laying within the switching system in case of short circuits in cables and wires, and if cables are laid in cable ducts.

18.3.8. Hardware design and software design

The stipulations of the hardware design and the stipulations of the software design are implemented in the design of the proper plant.

The stipulations for the components to be used and for their circuitry that are indicated in the hardware specification must be observed just as the stipulations for the error exclusions. The compliance with each of the above stipulations must be ensured and documented by appropriate means.
In the software, also the stipulations of the software specification must be observed and must be completely implemented.
Furthermore, here the subordinate stipulations for the software concerning safety-relevant programming must be observed. Stipulations for safety-relevant programming are among others:

- Clear and modular structure of the program
- Assignment of the functions to the safety functions
- Understandable presentation of the functions by:
  - Unique designations
  - Understandable comments
  - Use of tested functions or tested function block to the greatest possible extent
- Defensive programming

18.3.8.1. Testing of the hardware design

After planning is completed, it must be checked if the hardware design complies with the stipulations indicated in the hardware specification.
Furthermore, for every safety function the compliance with the specified safety level must be checked by means of an appropriate analysis. The analysis procedures are described in the relevant standards (e. g. EN13849-1).

18.3.8.2. Analysis of the circuit diagram

The complance with the safety-relevant stipulations must be checked by means of the switch diagram and by means of the piece list. In particular, the following items must be checked:

- The correct circuitry of the components according to the respective stipulations.
- The two-channel structure, if stipulated.
- The die Rückwirkungsfreiheit von parallelen, redundanten Kanälen.
- The use of the components according to the respective stipulations.

The audit is to be carried out by comprehensible analysis.

18.3.8.3. Iterative test of the achieved safety level

The achieved safety level must be determined by means of the circuit configuration (= one-channel architecture / two-channel architecture / with diagnostics or without diagnostics), by means of the device data (according to manufacturer information or according to relevant sources), and by means of the diagnostic coverage (information by the manufacturer of the PES or general sources). The relevant procedures must be taken from the safety standard used.

18.3.8.4. Verification of the software and parameters

The verification takes place in two steps:
Verification of the function chart with respect to the specified functionalityt
Verification of the function chart against the IL listing (IL = Instruction List) of the validation report, or rather, verification of the given parameters against the parameters listed in the validation report.

Verification of the functional scheme

For verification, the actually programmed function chart must be compared to the stipulations of the specifications.

The clearer programming has been structured with respect to the safety functions, the more efficient is the comparison.

18.3.8.5. Validation of the functional scheme against the Instruction List (AWL) and parameters via a validation report

The programming carried out in the FUP can be compared with the AWL listing of the validation report.
A step-by-step check is recommended. The check is more efficient if the programming in the FUP was executed in a structured manner.
After checking of the program, the parameters must be checked and compared against the requirements in the specification.

18.3.8.6. Execution of system tests / FIT (Fault Injection Test)

For the FIT, the manufacturer must compile a list of functions that must be tested. This list includes the defined safety functions as well as error tests to verify the correct reaction of the SRP/CS to these faults.

19. List of abbreviations

Abbreviation	Meaning	Comment
AC	Alternating Current	
BBH	Manufacturer of assemblies	
CRC	Cyclic Redundancy Check	Cyclical checksum calculation
DC	Diagnostic Couverage	
BG	Berufsgenossenschaft	Employer's Liability Insurance Association
Cat.	Category according to EN 13849-1	Architecture category
CE	Communauté Européenne	Symbol of conformity with relvant EU directives
CLK	Clock	cycle
CPU	Central Processing Unit	
DC	Direct Current	
DIN	Deutsches Institut für Normung	German Standardization Institue
[EMU]	Emergency Monitoring Unit	Safety function
[ELC]	Emergency Limit Control	Safety function
EMC	Electromagnetic compatibility	
EN	European Norm	
EtherCAT	EtherCAT (name)	Data protocol
FSoE	Fail Safe over EtherCAT	Safe data transfer via EtherCAT protocol
FUP	Function plan	
GND	Ground	Ground potential 0 VDC
H / HISIDE	High Side	Positive switching output 24 VDC
HW	Hardware	
I.	Input.	
IL	Instruction List	List of the commands within the assembly
IO	Input Output	Digital input / digital output
IP	International Protection	Protection class according to the norm
ISO	International Organization for Standardization	
LED	Light Emitting Diode	Electroluminescent diode
LOSIDE	Low Side	Output switching after grounding 0 VDC
O.	Output.	
PAA	Prozessabbild der Ausgänge	Process image of the outputs
PAE	Prozessabbild der Eingänge	Process image of the inputs
PELV	Protective Extra Low Voltage	

Abbreviation	Meaning	Comment
PLC	Programmable Logic Controller	
POR	Power On Reset	RESETprocedure
SafePLC2	Program for the programming of PLC	Programming surface for the programming of assemblies developed by BBH
SSCU	Safe ScannerControl Unit	FSoE Master assembly to process encoder data, input data and output data
SDDC	Safe Device to Device Communication	
SDU	Safe Drive Unit	FSoE assembly to record encoder values
SDP	Safe Drive Profile	Data profile for safe encoder data
SELV	Safe Extra Low Voltage	Safe (fused) low voltage
SIO	Safe IO	FSoE-Slave assembly to record digital inputs / digital outputs
SMMC	Safe Master to Master Communication	
SSB	Safe Sensor Box	FSoE-Slave assembly to record encoder data from 6 encoders
SSI	Synchronous Serial Interface	
SW	Software	
T.	Pulse output.	Pulsed signal
VDE	Verband der Elektrotechnik	Registered Association of the Electrical, Electronic and Information Technology Association

Table 13: Abbreviations

20. Standards

20.1. UL/CSA -Certification

NOTE	**Loss of operating license within the scope of UL/CSA** • Use only insulated copper cables rated at least for 60 °C. • Either the power supply (SELV) for the device must be equipped with UL-approved overcurrent protection, according to UL 61010-1, or • a power supply according to NEC Class 2 (power consumption limited to 100VA) is used.

20.2. EU directives

EC Type-Examination Certificate ()

20.3. CE marking

CE

EG/EU-Konformitätserklärung nach Maschinenrichtlinie 2006/42/EG und nach RoHS-Richtline 2011/65/EU

EC/EU declaration of conformity in accordance with Machinery Directive 2006/42/EC and RoHS directive 2011/65/EU

EU-Richtlinien

EU directive

Folgende EG-Richtlinien wurden der Entwicklung, dem Betrieb und der Prüfung zugrunde gelegt:
The development, operation and testing were based on the following EC directives:

- Richtlinie 2006/42/EG Maschinen-Richtlinie
- Richtlinie 2014/30/EU EMV-Richtlinie
- Richtlinie 2011/65/EU RoHS-Richtlinie

Firma *Manufacturer*	**BBH Products GmbH**
Anschrift *Address*	**Böttgerstrasse 40** **92637 Weiden** **Deutschland**
Produkt	**SSCU/x Serie** **Frei programmierbare Sicherheitssteuerung zur Überwachung von Antriebssystemen, geeignet für SIL 3 IEC 61508:2010, bzw. PL e nach EN ISO 13849-1:2015.**
Product	***SSCU/x Serie*** ***Free programmable safe plc for monitoring of drives, appropriated for SIL 3 IEC 61508:2010, resp. PL e according EN ISO 13849-1:2015***
Produktname *Product name*	**Produktliste siehe Anhang** ***product list see annex***

Das Produkt wurde entwickelt, konstruiert und gefertigt in Übereinstimmung der o.g. Richtlinien.
The product was developed, designed and manufactured in accordance to the directive as named above.

Angewendete harmonisierte Normen bzw. sonstige technische Normen und Vorschriften /
Applied harmonized standards or other technical standards and regulations:

Norm / *Standard*	**Titel / *Title***	**Ausgabe / *Edition***
EN ISO 13849-1	Sicherheit von Maschinen - Sicherheitsbezogene Teile von Steuerungen - Teil 1: Allgemeine Gestaltungsleitsätze *Safety of machinery – Safety-related parts of control systems - Part 1: General principles for*	2015
EN 62061	Sicherheit von Maschinen - Funktionale Sicherheit sicherheitsbezogener elektrischer, elektronischer und programmierbarer elektronischer Steuerungssysteme *Safety of machinery - Functional safety of safety-related electrical, electronic, programmable electronic control systems*	2005 + AC:2010 + A1:2013 + A2:2015
EN IEC 61010-2-201	Sicherheitsbestimmungen für elektrische Mess-, Steuer-, Regel- und Laborgeräte - Teil 2-201: Besondere Anforderungen für Steuer- und Regelgeräte *Safety requirements for electrical equipment for measurement, control, and laboratory use. Part 2-201. Particular requirements for control equipment*	2018
EN 60204-1	Sicherheit von Maschinen – Elektrische Ausrüstung von Maschinen – Teil 1: Allgemeine Anforderungen *Safety of machinery – Electrical equipment of machines – Part 1: General requirements*	2018
EN ISO 13850	Sicherheit von Maschinen, Not-Halt, Gestaltungsleitsätze *Safety of machinery, Emergency stop, principles for design*	2015
IEC 61508	Teil 1-7: Funktionale Sicherheit sicherheitsbezogener elektrischer/elektronischer/programmierbarer elektronischer Systeme *Part 1-7: Functional safety of electrical/electronic/programmable electronic safety-related systems*	2010
EN 55011	Industrielle, wissenschaftliche und medizinische Geräte - Funkstörungen - Grenzwerte und Messverfahren *Industrial, scientific and medical equipment – Radio-frequency disturbance characteristics – Limits and methods of measurements*	2016 + A1:2017
EN IEC 61800-3	Drehzahlveränderbare elektrische Antriebe – Teil 3: EMV-Anforderungen einschließlich spezieller Prüfverfahren Adjustable speed electrical power drive systems – Part 3: EMC requirements and specific test methods.	2018

EN 61800-5-2	Elektrische Leistungsantriebssysteme mit einstellbarer Drehzahl Teil 5-2: Anforderungen an die Sicherheit – Funktionale Sicherheit *Adjustable speed electrical power drive systems – Part 5-2: Safety requirements – Functional*	2017
EN IEC 61000-6-2	Elektromagnetische Verträglichkeit (EMV) – Teil 6-2: Fachgrundnormen – Störfestigkeit für Industriebereiche *Electromagnetic compatibility (EMC) – Part 6-2: Generic standards – Immunity for industrial environments*	2019
EN IEC 61000-6-4	Elektromagnetische Verträglichkeit (EMV) – Teil 6-4: Fachgrundnormen – Störaussendung für Industriebereiche *Electromagnetic compatibility (EMC) – Part 6-4: Generic standards – Emission standards for industrial environments*	2019

Benannte Stelle, die das EG-Baumusterprüfverfahren nach oben genannter Richtlinie durchgeführt hat
Notified body that has conducted the EC type-examination procedure in accordance with the above-mentioned directive
Name, address, identification number: TüV Rheinland Industrie Service GmbH, Am Grauen Stein, 51105 Köln / Germany, xxxx No. Of EC type-examination certificate xxxxxxx

Bemerkungen/*Notes:*
Die Produkte entsprechen den Anforderungen der EMV-Richtlinie 2014/30/EU.
The products are in accordance to the EMC Directive 2014/30/EC.

Den im Produkthandbuch beschriebenen Sicherheits-, Installations- und Bedienungshinweisen muss Folge geleistet werden.
These products must be installed and operated with reference to the instructions in the Product Manual.
All instructions, warnings and safety information of the Product Manual must be adhered to.

Für das Produkthandbuch zeichnet sich Dipl.-Ing. (FH) Gerhard Bauer verantwortlich.
For the Product Manual is responsible Dipl.-Ing. (FH) Gerhard Bauer.

Weiden, 25/03/2024

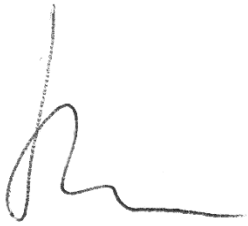

Gerhard Bauer, *Managing Director*

Anhang

annex

Typ *Type*	Beschreibung *Description*	Version / *Version*	
		Hardware	Firmware CPU / FPGA
SSCU/1	Sicherheitssteuerung zur Überwachung von Antriebssystemen *Safety controller for monitoring drive systems*	04	1.0.1.5 / 39
SSCU/1/AX	Sicherheitssteuerung zur Überwachung von Antriebssystemen *Safety controller for monitoring drive systems*	04	1.0.1.5 / 39