ESTUN ROBOTICS





OPERATION INSTRUCTIONS

ESTUN Bending Series

Robot Body Operation Instructions

ALL MADE BY ESTUN

ESTUN AUTOMATION

ESTUN Bending Series

Robot Body Operation Instructions

EBM07101-EN-13

Preface

This manual describes the following manipulators.

Robot type	Load capacity
ER45-2200-BD	45kg
ER80B-2565-BD	80kg
ER130-2865-BD	130kg

Related manuals

ESTUN Bending Robot Mechanical Operator's Manual
ESTUN Robot ER Series Cabinet Operator's Manual
ESTUN Integrate Series Cabinet Operator's Manual
ESTUN RCS2 System Operator's Manual
ESTUN CP System Operator's Manual

Thank you for purchasing ESTUN robots.

Before using the robot, be sure to read the SAFETY PRECAUTION and understand the content.

ESTUN endeavor to improve the products. All specifications and designs are subject to change without notice.

All statements, information, and advice provided in this manual have been carefully processed, but no guarantee is given for their complete accuracy. We shall not be held liable for any direct or indirect losses arising from the use of this manual.

Users are solely responsible for the application of any products and should exercise caution when using this manual and the associated products.

The interpretation of all content in this manual belongs to ESTUN Robotics Engineering Co., Ltd.

This manual may not be reproduced and copied in any way, in whole or in part, without a license to any party.

ESTUN Robotics. All Rights Reserved Copyright.

Hotline: 400-025-3336

ADD: NO.1888, Jiyin Avenue, Jiangning Development Zone, Nanjing Post Code: 211102

TEL: +86-025-58328532

WEB: www.estun-robotics.com

E-mail: export@estun.com

Revision record

Revision	Date	Contents
01	2019.07	New edition.
02	2019.01	Add ER80-2565-BD ER80B-2565-BD ER45-2200-BD
03	2019.04	Modify part list. Modify the error description.
04	2019.12	Modify the range of action graph. Supplement the robot specification table. Modify the error description.
05	2020.03	Update the size of the installation iron plate, the schematic diagram of the ground installation, and the schematic diagram of the base pipeline interface.
06	2021.02	Add ER80B-2565-BD
07	2022.01	Modify 5.5 Robot lubrication notes.
08	2022.05	Add ER45-2200-BD
09	2022.09	Update 1.2 Installation Note, the connection between Update 2 and the appliance.
10	2023.04	Update the manual.
11	2023.11	Addition of grease seepage inspection section and modification of the periodic maintenance form.
12	2025.2	1、Delete ER80-2565-BD 2、P9 and P11，M20×70 change to M20×65，cylindrical pin 20X60 改为 12 X 60 3、GREASING：Add a "Attention" note 4、5.2. PERIODIC CHECKS AND MAINTENANCE 1. Table added”half year 1920h” 2. Inspection of gas spring Change to: half a year 1920h
13	2025.5	1、Add 5.7 warranty 2、Revise some errata

Safety

This chapter describes the precautions which must be followed to ensure the safe use of the robot. Before using the robot, be sure to read this chapter thoroughly.

ESTUN robots must be transported, mounted and operated in accordance with national laws, regulations and standards. Appropriate safeguards must be correctly performed to protect the users. Before using (mounting, operating, maintaining, repairing) the robot, be sure to read and understand this manual and its relevant manuals. Be sure to have familiarization with the knowledge of robot system and the safety precaution. Even if all instructions are followed, this is not a guarantee that the robot will not cause injuries or damage.

DEFINITION OF USER

The personnel can be defined as follows.

- Operator

  Turns the robot power ON/OFF.

  Starts the robot program from the panel.

- Programmer

  Operates the robot.

  Teaches the robot inside the safety area.

- Maintenance engineer

  Operates the robot.

  Teaches the robot inside the safety area.

  Maintenance (repair, adjustment, replacement).

Operator must not work in the safety area.

Programmer and maintenance engineer can work in the safety area.

During operation, programming, and maintenance of the robot, the operator, programmer, and maintenance engineer should take precautions to ensure the safety by wearing the following safety items.

- Clothes for operation
- Safety shoes
- A helmet

SPECIAL TRAINING

Tasks in the safety area including transportation, setting, teaching, adjustment, maintenance, etc.

Training course must be performed before operating the robot.

For more information about training course, contact ESTUN.

DEFINITION OF SAFETY NOTATIONS

Precautions and information are defined as follows.

Symbol	Definitions
 WARNING	**Danger notation** Death or serious injury will be expected to occur if the user fails to follow the approved procedure.
 CAUTION	**Caution notation** Minor or moderate injury of the user or equipment damage will be expected to occur if the user fails to follow the approved procedure.
	**Information** A supplementary explanation help users operating the robot more efficiently.

SAFETY OF THE USER

(1) The robot should be transported and installed as procedures recommended by ESTUN. Wrong procedures may cause severe injuries or damage due to the robot fall.

(2) Draw an area clearly indicates the safety area. Install a fence or hang a warning board to ensure the safety operation of the robot, and keep unauthorized personnel outside the safety area.

(3) Never hang any tools above the robot. Falling of these tools may cause damage to equipment.

(4) Never lean on the cabinet. Never touch any buttons without permission. Unexpected movement of the robot may cause personnel injuries and equipment damage.

(5) Take precautions for falling parts to avoid injuries when disassemble the robot.

(6) Turn off the power when adjusting peripheral equipment.

(7) Peripheral equipment must be grounded.

(8) The robot should be operated in a low speed in the first operation. The speed should be added gradually to check if there is any abnormal situation.

(9) Do not wear gloves when using the teach pendant. Operate with gloves may cause an operation error.

(10) Programs, system variables, and other information can be saved on the memory card or USB memories. Be sure to save the data periodically in case that the data is lost.

(11) Never forcibly move any axis of the robot. Move the axes forcibly may cause injuries or damage.

(12) Take precautions when wiring and piping between the robot, the cabinet, and peripheral equipment. Put the pipes, wires or cables through a pit or covered with a protective lid, to avoid stepped by personnel or run over by a forklift.

(13) Unexpected movement may occur on any operating robot, which will cause severe injuries or damages in the working area. Test (safe door, brake, safe indicators, etc.) must be performed on each safety measures before using the robot. Before turn on the system, make sure that no one is in the working space.

(14) Never set motion range or load condition exceeds the rated range. Incorrect setting may cause personnel injury and equipment damage.

(15) Observe the following precautions when teaching inside the working space of the robot

- Do not enable the system unless the mode is switched to manual, and make sure that all auto-control is cut off.
- Speed must be limited under 250mm/s at manual mode. Only authorized person with fully understand of the risks can adjust the robot to rated speed manually.
- Be careful about rotating joints to prevent hair and clothes involved. Take precautions of injury or damage caused by the manipulator or other auxiliary devices.
- Check the motor brake to avoid personnel injuries caused by unexpected situation.
- Always have an escape plan in mind in case the robot comes towards you unexpectedly.

- Ensure that there is a place to retreat to in case of emergency.

WARNING	**Never stand beneath the robot in case of unexpected movement or the system be turned on inadvertently.**

CAUTION	**Make sure there is a CO_2 fire extinguisher at hand.**

SAFETY OF OPERATORS

(1) Before operating the robot, check that the SERVO ON indicator goes out when the EMERGENCY STOP button on the right of the front door of the controller and the pendant are pressed. And confirm that the power is turned off.

(2) Never allow unauthorized personnel to touch the controller during operation. This may result in unexpected movement of the robot, severe injuries and material damage.

(3) When attaching tools to the robot, be sure to turn off the power of the controller and the peripheral equipment, and display a warning sign. Turning the power on during equipment installation may cause electric shock or injury due to unexpected movement of the robot.

(4) Emergency stop is an external button of the controller that can stop the robot operation. When emergency button is pressed, the power of the robot (except the power of the servo) is cut off. The system will not run unless the pressed emergency button being released and the system being turned on.

	**There are several emergency stop buttons in a robot system to stop the robot in case of emergencies. The red button, as shown in the left figure, can be mounted on the teach pendant and the controller. Certainly, the emergency buttons can be mounted by special requirement.** **Emergency stop button should be mounted where is easy to reach, so that the buttons can be pressed down immediately in case of emergencies.**

WARNING	**Operators must take precautions to avoid high voltage from cables of servo motors, grippers and other devices.**

CAUTION	**Emergency button is used in case of emergency only. Do not use it to stop the robot for normal operation.**

SAFETY OF PROGRAMMERS

While teaching the robot, the programmer must enter the robot operation area. The programmer must ensure the safety especially.

CAUTION	**Turn on or off the system by press or release Mot button on the teach pendant.**

To use the teach pendant safely, the following precautions should be taken.

- Be sure that the enable switch is effective at any time.

- Turn off the enable switch when pausing, programming or testing the system.
- Teach pendant must be taken with the programmer when teaching in the work space, to avoid inadvertent operation by unauthorized person.
- Teach pendant must not be left within the work space of the robot, as injury or damage can occur if the robot comes in contact with the teach pendant.

SAFETY OF MAINTENANCE ENGINEERS

(1) Heated parts

Some parts of the robot are heated when the robot is operating, especially the servo motor and reducer. If a maintenance engineer needs to touch such a part, the user should wear heat-resistant gloves or use other protective tools.

CAUTION	**Try to feel the temperature of heated parts before touching them, to avoid burn injuries.** **After turning off the power supply, wait until the heated parts cool down before performing any maintenance.**

(2) Disassembly parts

Open the cover or shell only after interior parts such as gears are not moving any more. Never open the cover or shell when the gear or bearing is moving. Use auxiliary device to keep interior part to its position.

Observe the following precaution when performing the first test after installation, inspection or maintenance:

a) Clear tools to proper locations outside of the working space of the robot.
b) Make sure that all precaution measures are available.
c) Make sure that there is no one in the working space of the robot.
d) Pay special attention to working condition of the maintenance parts when performing test.

Never use the manipulator as a ladder when performing maintenance. Never climb on the manipulator to avoid falling down.

(3) Pneumatic / hydraulic pressure

There may be air/liquid residue in the system when the air pump or hydraulic pump is turned off. Before checking the pneumatic or hydraulic parts, release remaining pressure from the system to avoid personnel injury or equipment damage.

CAUTION	**Install a safety valve in case of accident.**

(4) Although the power supply need to be turned on during fault diagnosis, it must be turned off when perform maintenance.

(5) Brake inspection

Brake may be wearing in daily operation. So brake inspection should be performed by the following procedure:

a) Move each joint to the position where the joint bears maximum load.
b) Turn off the robot. The brake works.
c) Mark each joint.
d) Check if the joint moves over a period of time.

(6) Greasing

Personnel injury or equipment damage may occur during greasing. Observe the following precautions before

greasing.

- Take additional care of safety by wearing safety items (such as gloves) to avoid injury from heated grease or reducer.
- Open the grease chamber with caution and keep away from the opening. Grease may spray due to grease pressure.
- Feed the grease according to required quantity and never fill up the grease chamber. Check the grease indicator when finished.
- Never mix different types of grease into one reducer. Clean the grease chamber thoroughly before changing grease type.
- Grease draining must be performed thoroughly. Check the grease indicator when finished.

INFO	**Operate the robot for a short period of time before grease draining to heat the grease.**

SAFETY OF THE TOOLS AND PERIPHERAL EQUIPMENT

Peripheral device may still be running even after the system has been turned off. Personnel injury may occur due to damaged power lines.

SAFETY OF THE ROBOT MECHANICAL UNIT

For abnormal or emergency situations, e.g. persons trapped in or pinched by the robot, the robot axes should be moved. (Contact ESTUN for more details about dismantling).

Small arms can be moved by hand. Lager arms should be moved by crane or other handling equipment.

Fasten the robot firmly before releasing the brake to avoid secondary injury caused by falling arms.

STOP TYPE OF ROBOT

There are three types of robot stop.

Power-off stop

Servo power is turned off and the robots stops immediately. Servo power is turned off when the robot is moving, the path of the deceleration in uncontrolled.

The following processing is performed at Power-off stop:

- An alarm is generated and servo power is turned off immediately.
- Execution of the program is paused.

Frequent Power-off stop of the robot during operation can cause failures of the robot. Avoid system designs that require routine or frequent Power-off stop conditions.

Alarm stop

The robot system sends alarm (not include power-off alarm), and the robot is decelerated until it stops by control instructions.

The following processing is performed at Alarm stop:

- An alarm (not include power-off alarm) is generated due to overload, system faulty, etc.
- Control instruction is send from servo system. The robot operation is decelerated until it stops. Execution of the program is paused.
- Servo power is off.

Hold

The robot is decelerated until it stops, and servo power remains on.

The following processing is performed at Hold:

- The robot operation is decelerated until it stops. Execution of the program is paused.

LABELS

(1)Electric Shock Warning

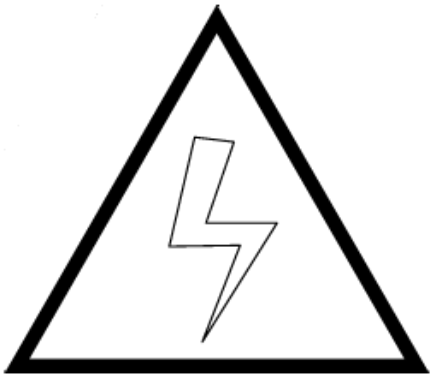

Fig 0.1 Electric Shock Warning

This label indicates hazardous voltage or electric shock.

(2)High-temperature Warning

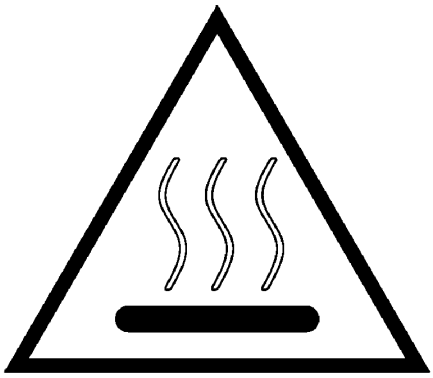

Fig 0.2 High-temperature Warning

Be cautious about a section where this label is affixed, as the section generates heat. If you have to inevitably touch such a section when it is hot, use a protection provision such as heat-resistant gloves.

(3)No Step-on Warning



Fig 0.3 Step-on prohibitive Warning

Never step on or climb the robot or controller as it may adversely affect the robot or controller and may get hurt if you lose your footing as well.

(4)Personal Injury Warning

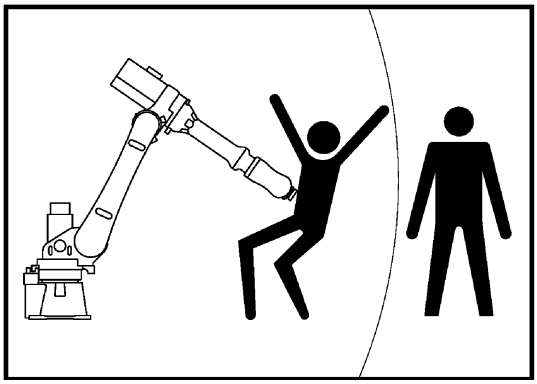

Fig 0.4 Personal Injury Warning

Never enter the operation area while the Manipulator is moving. This is extremely hazardous and may result in serious safety problems.

(5)No Disassembly Warning



Fig 0.5 No Disassembly Warning

Never perform disassembly arbitrarily where the warning is affixed. Contact ESTUN for disassembly.

(6)Energy Storage Warning

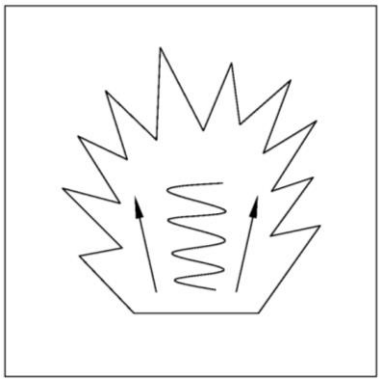

Fig 0.6 Energy Storage Warning

The balance cylinder is equipped with springs, high-pressure gas or high-pressure liquid. Never disassemble the balance cylinder without permission.

CONTENTS

Preface 2
Revision record 4
Safety 5
CONTENTS 1
1. Transportation and installation 1
1.1. TRANSPORTATION 1
1.1.1. Transport by a forklift 3
1.1.2. Transport by a crane 5
1.2. INSTALLATION 9
8-Φ22 through 13
1.3. INSTALLATION CONDITIONS 14
2. Connection with the controller 15
3. Specifications 16
3.1. ROBOT CONFIGURATION 16
3.2. EXTERNAL DIMENSIONS AND OPERATING SPACE 19
3.3. ZERO POINT POSITION AND MOTION LIMIT 22
3.4. WRIST LOAD CONDITION 25
4. Equipment installation 28
4.1. FLANGE DIMENSION 28
4.2. EQUIPMENT MOUNTING FACE 29
4.3. PIPES AND TUBES 31
5. Maintenance, Repair and Warranty 33
5.1. DAILY CHECKS 33
5.2. PERIODIC CHECKS AND MAINTENANCE 33
5.2.1. Inspection of gas spring 35
5.3. ADJUSTING THE BELT 37
5.4. REPLACING THE BATTERY 39
5.5. GREASING 41
5.5.1. Position of grease inlet/outlet on each axis 42
5.5.2. Procedures of greasing 48
5.5.3. Procedure for releasing remaining pressure within the grease bath 48
5.6. Grease leakage inspection 49
5.7. Warranty 49
6. Calibrating 50
6.1. INTRODUCTION 50
6.2. QUICK ZERO POSITION CALIBRATION 50
6.3. MECHANICAL ZERO POSITION CALIBRATION 51
6.3.1. J1-axis calibration 51
6.3.2. J2-axis calibration 53

6.3.3. J3-axis calibration 54
6.3.4. J4-axis calibration 54
6.3.5. J5/J6 axis calibration 55
7. Troubleshooting 56
7.1. TOOLS 56
7.2. TROUBLESHOOTING 56
7.3. REPLACING THE SERVO MOTOR 57
Appendix 58
APPENDIX A BOTL TORQE LIST 58
APPENDIX B SPECIFICATION OF BOLT 58
APPENDIX C Part list for ER45-2200-BD 58
APPENDIX E Part list for ER80B-2565-BD 58
APPENDIX F Part list for ER130-2865-BD 59

1. Transportation and installation

1.1. TRANSPORTATION

WARNING	**When transport the robot, be sure the robot is in safe condition, or it may result in serious personnel injury and/or equipment damage.**

Turn each axis to transportation gesture before move the robot and be sure to keep the gesture during transportation until it be properly installed and mounted. Transportation gesture of each axis is shown below. Perform the transportation properly, or it may result in personnel injury or equipment damage.

Position	J1 axis	J2 axis	J3 axis	J4 axis	J5 axis	J6 axis
ER45-2200-BD	0°	-68°	+60°	0°	+98°	0°
ER80B-2565-BD	0°	-19°	-188°	0°	+117°	0°
ER130-2865-BD	0°	-10°	-198°	0°	+118°	0°

Fixed bracket should be mounted before transport the robot and be removed before install the robot. Refer to the following figures when remove the bolts on fixed bracket.

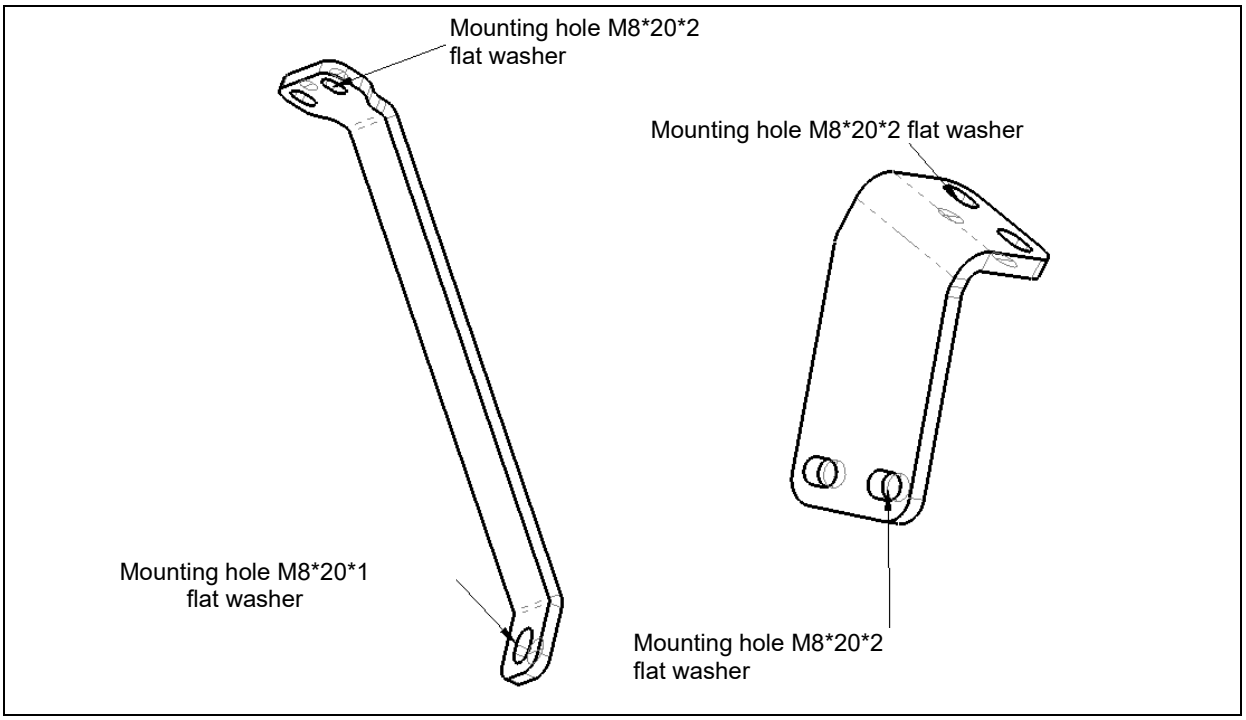

Fig 1.1 Robot fixed bracket (ER45-2200-BD)

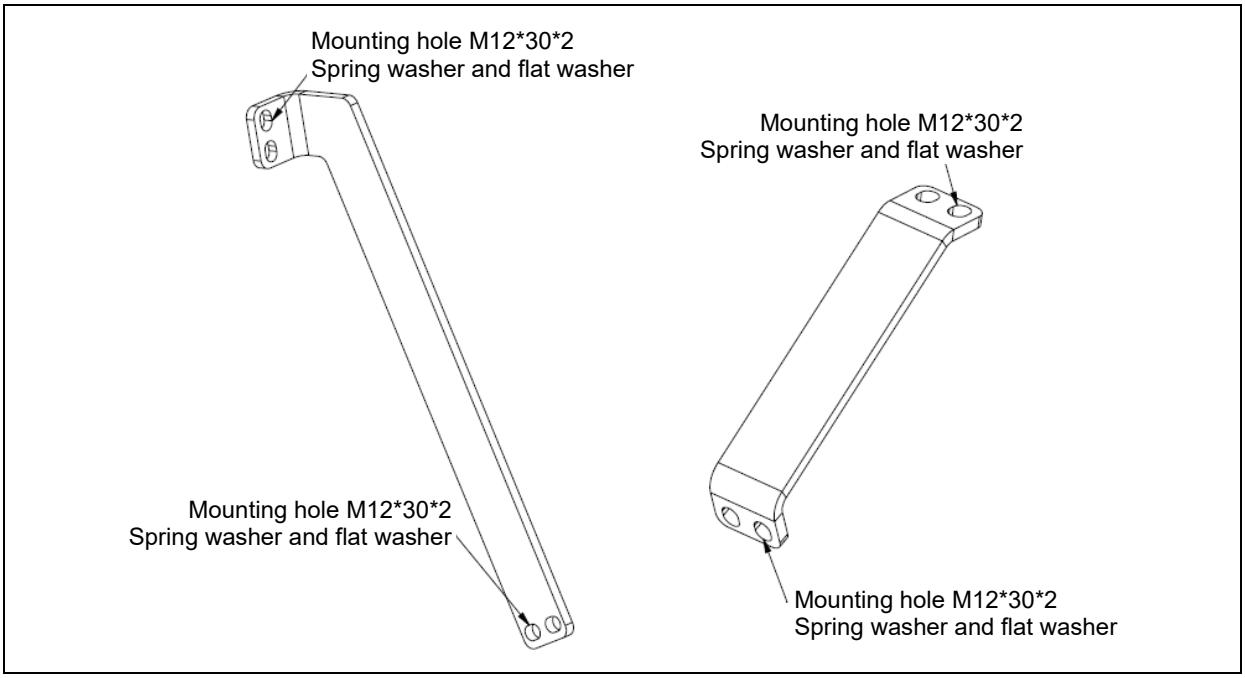

Fig 1.2 Robot fixed bracket (ER80B-2565-BD)

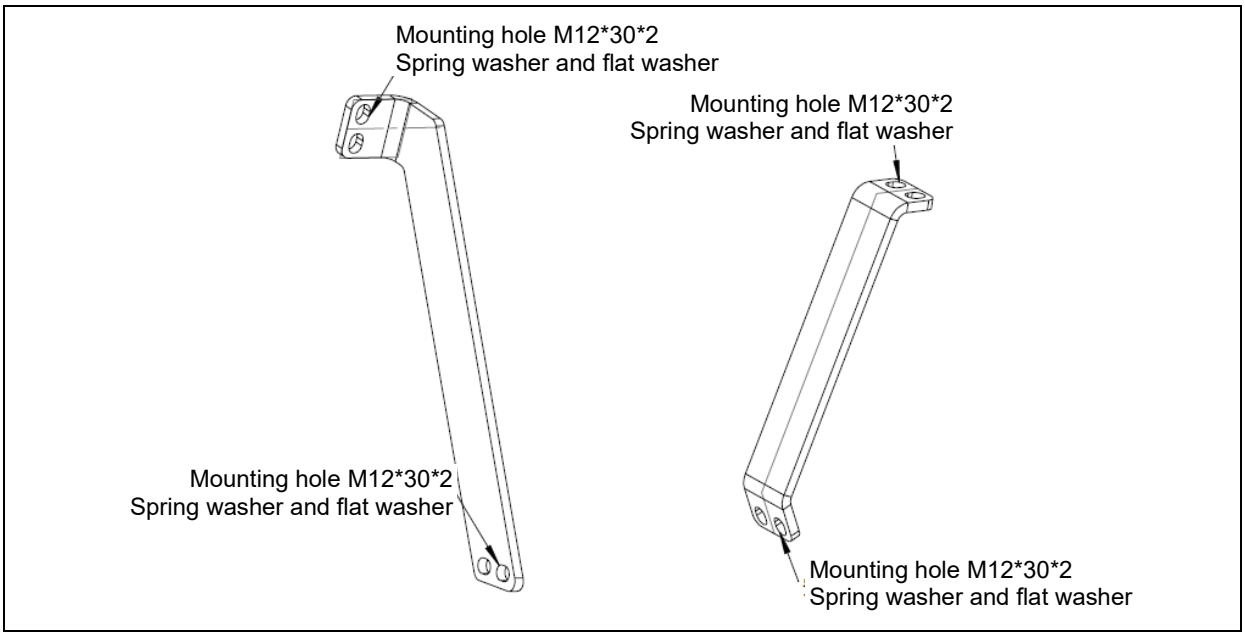

Fig 1.3 Robot fixed bracket (ER130-2865-BD)

Refer to theoretical weight of main parts shown below to install, disassemble and transport the robot.

Parts	Weight (kg)		
	ER45-2200-BD	ER80B-2565-BD	ER130-2865-BD
Robot	520	730	950
Big arm casting	49	70	113
Base assembly (Including rotation base)	285	390	413
Small arm assembly (Including casting and motor of J3 axis)	70	120	180

Parts	Weight (kg)		
	ER45-2200-BD	ER80B-2565-BD	ER130-2865-BD
Wrist assembly (including motors of J5, J6 axes)	35	43	60
Gas spring assembly	-	-	23

INFO **Some parts with less weight are not listed. Contact ESTUN if you need the details.**

1.1.1. Transport by a forklift

The robot described in this manual can be transported by a forklift. Use 8 M12X30 bolts to fix the 4 fixed plates on the forklift to the robot base, use a forklift to heave the robot. Make sure that the fixed bolts of the robot are removed before transportation.

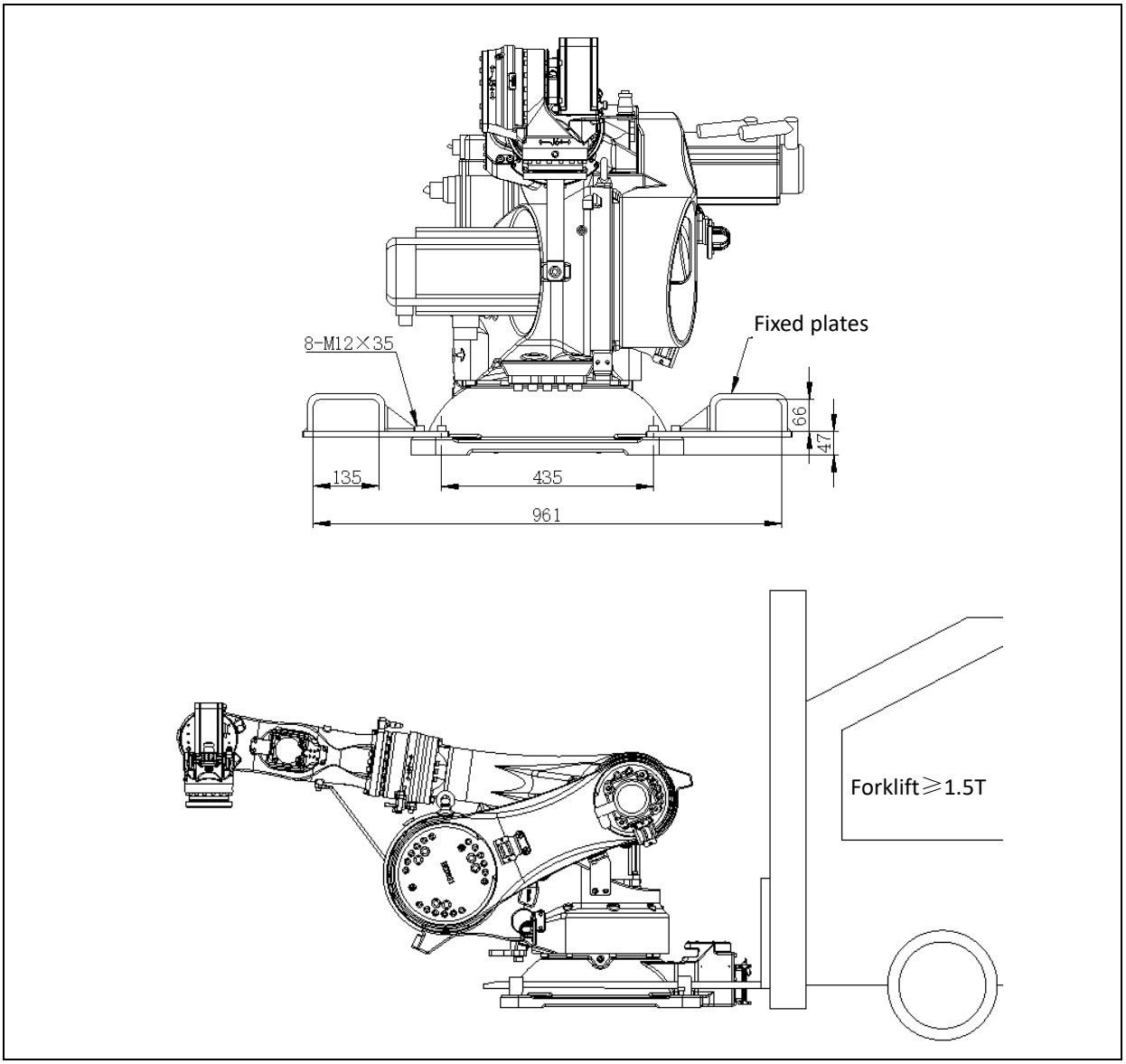

Fig 1.4 Use a forklift to transport the robot(ER45-2200-BD)

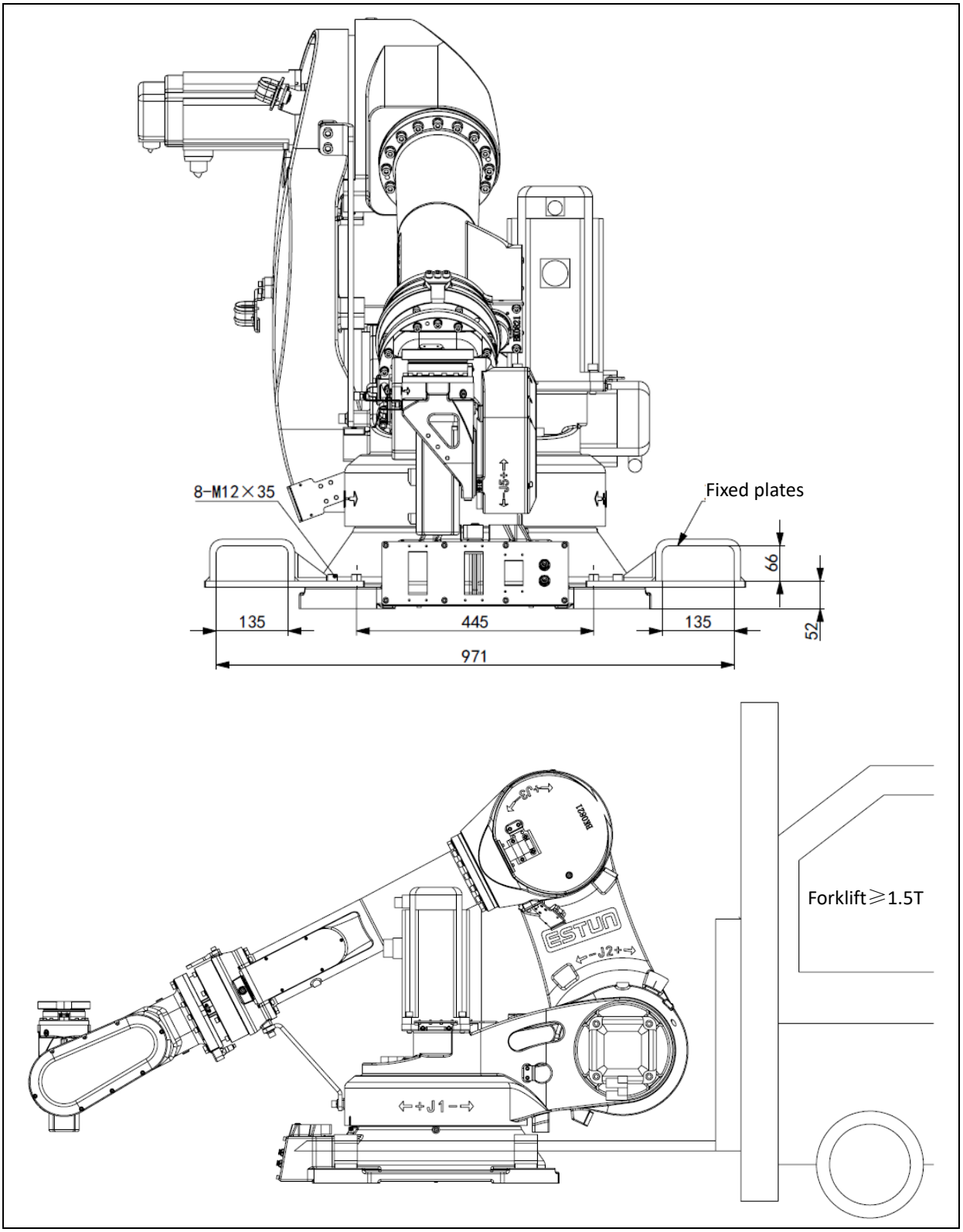

Fig 1.5 Use a forklift to transport the robot(ER80B-2565-BD, ER130-2865-BD)

1.1.2. Transport by a crane

CAUTION	**Eyebolts and slings should be prepared by customers. Eyebolts should be removed before using the robot. Transportation conditions are listed below.** **1. Crane load capacity above 1500kg.** **2. String load capacity above 750kg.** **3. Rings with specifications conforming GB/T 825-1988.**

The robot can also be handled by crane. Before handling, install the lifting eye screws on the robot base and the transfer seat respectively (ER80B-2565-BD, 3 for ER45-2200-BD, 2 for ER130-2865-BD), and use 3 slings with a tensile force greater than 750kg to fix the lifting eye screws respectively. Before handling the robot, it must be confirmed that all the fixing bolts of the robot have been removed.

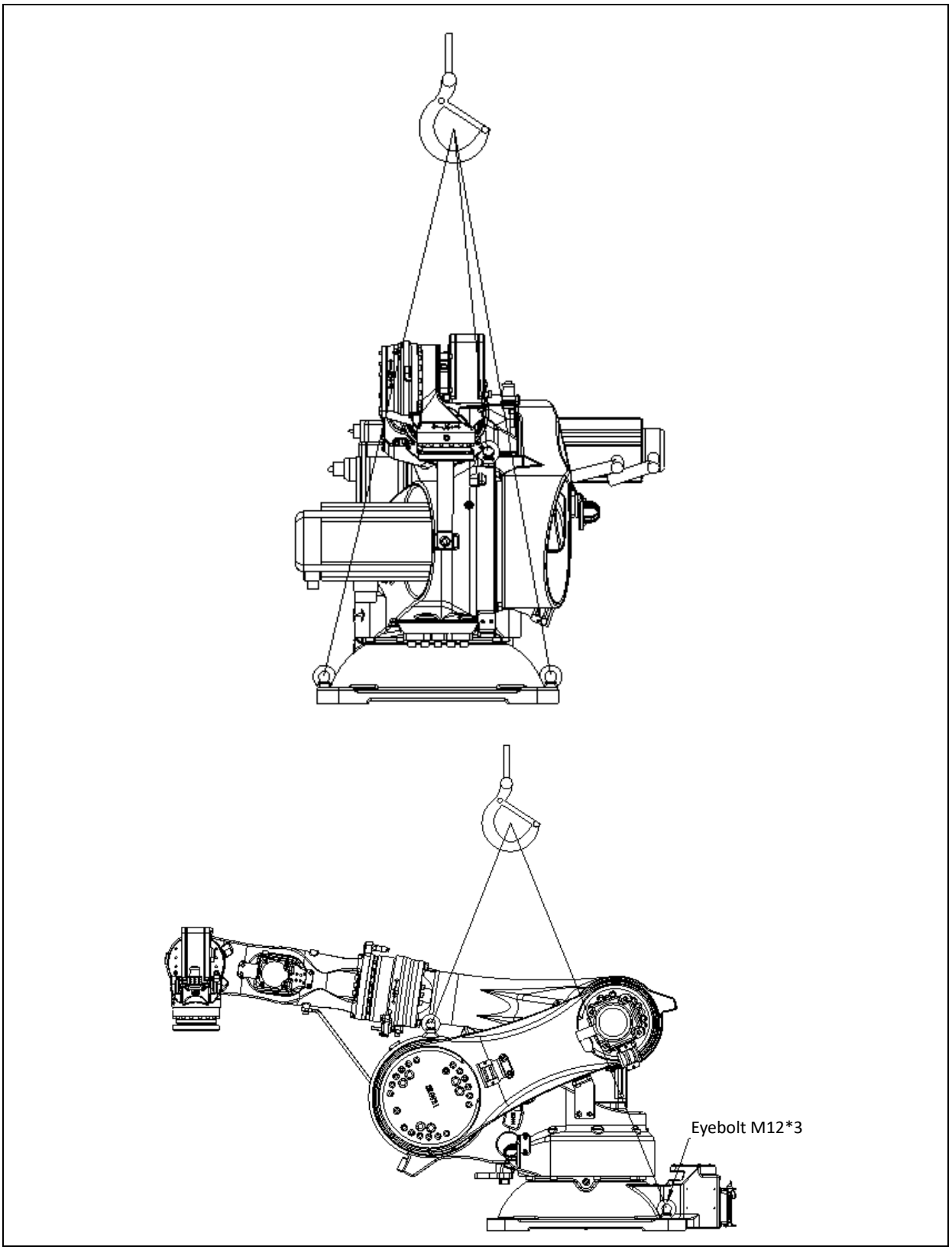

Fig 1.6 Use a crane to transport the robot(ER45-2200-BD)

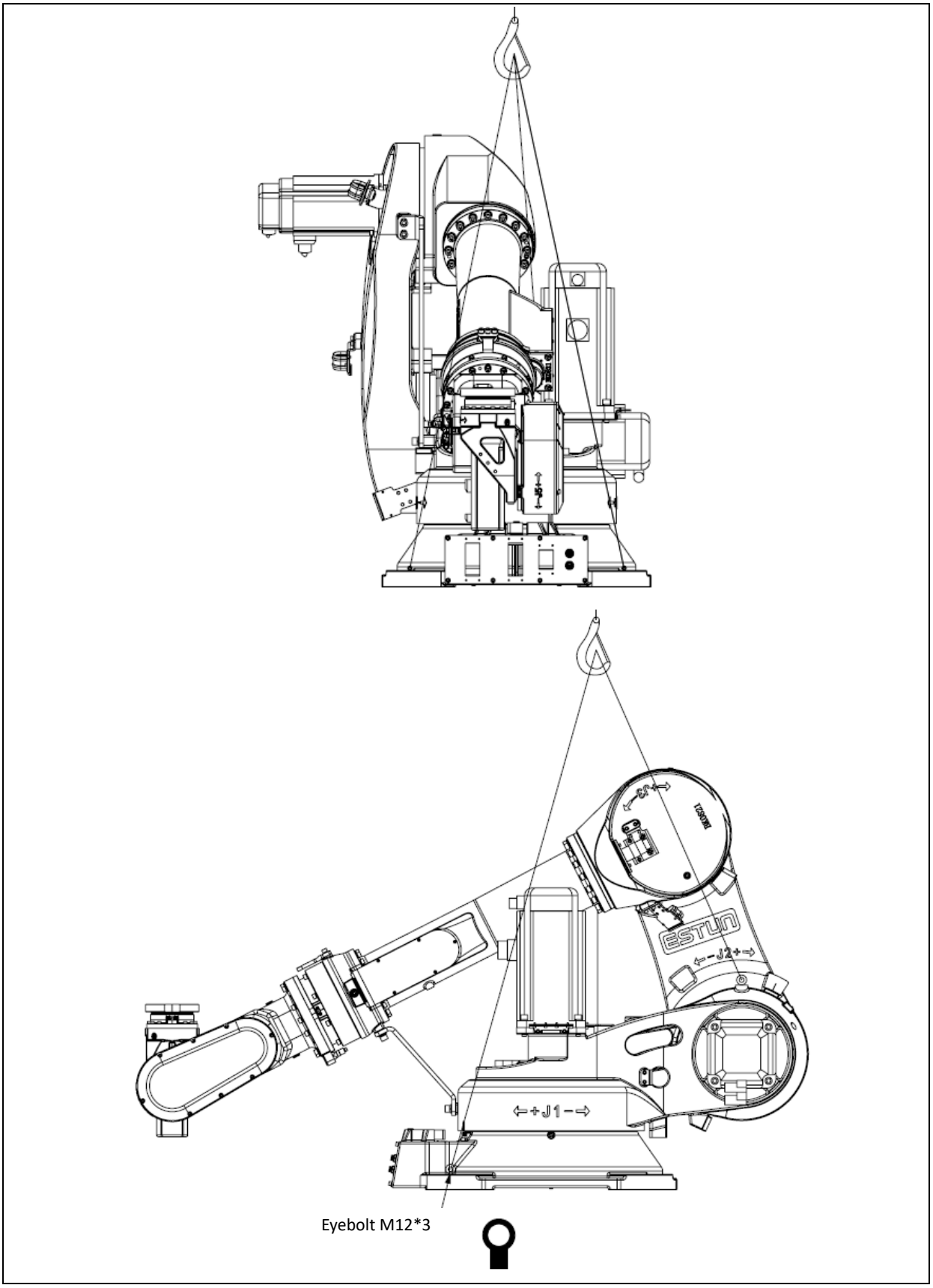

Fig 1.7 Use a crane to transport the robot(ER80B-2565-BD)

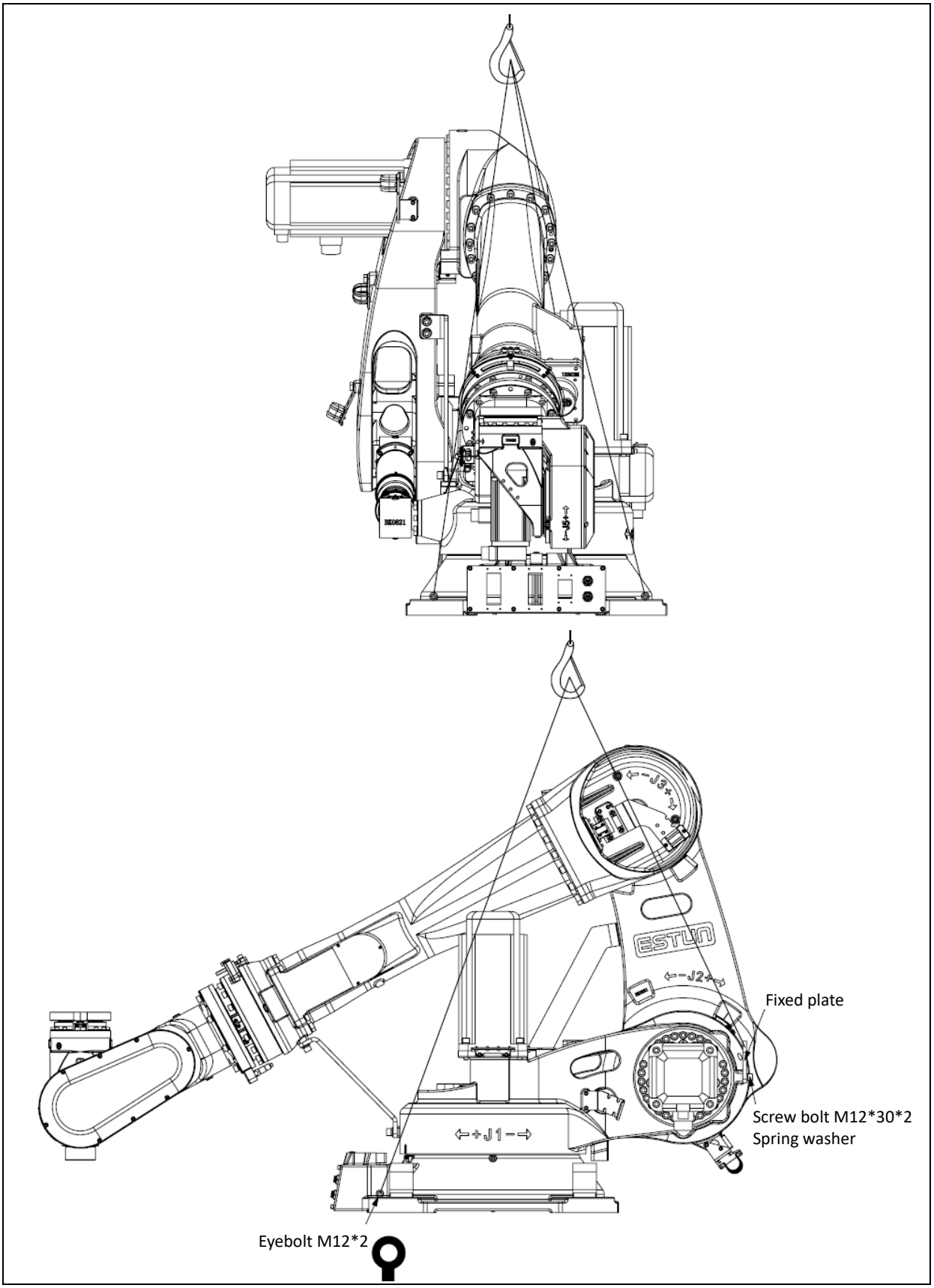

Fig 1.8 Use a crane to transport the robot (ER130-2865-BD)

1.2. INSTALLATION

> **CAUTION** **Make sure the system is properly grounded before installation.**

The following precautions must be fully understood and observed before installing the robot.

- Be sure to read and understand SAFETY chapter thoroughly.
- ESTUN robots must be transported, mounted and operated by authorized person, and in accordance with the applicable national laws, regulations and standards.
- Check the external damage of the robot package. Open the package and check the external damage of the robot.
- Make sure the weight of the robot is within the forklift or crane load capacity. Details see Section 1.1 TRANSPORTATION.
- Storage and mounting condition should be complied with Section 1.3 INSTALLATION CONDITION.

> **CAUTION**
>
> **When mounting the robot base, consider its structure and the force upon it. Concrete on the base may not have any crack and conform to the specified codes. The bearing capacity and compaction of the concrete foundation should be in accordance with the design guideline. Concrete strength level C20/C25 should be in accordance with the following codes:**
>
> - **GB50010-2010** ***Code for design of concrete structures***
> - **GB/T50081-2002** ***Standard for test method of mechanical properties on ordinary concrete***

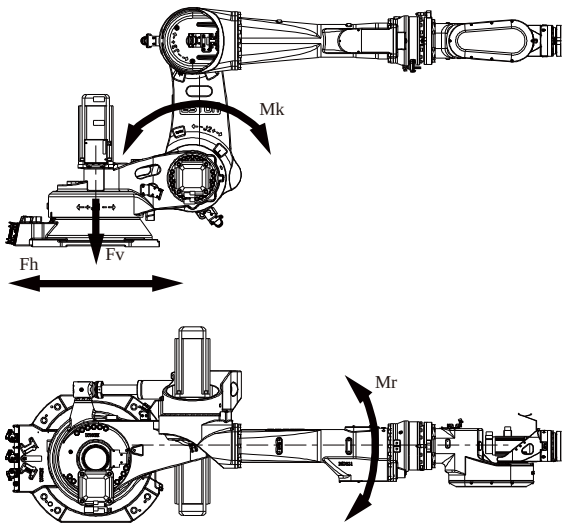

Item	Definition	Max value		
		ER45-2200-BD	ER80B-2565-BD	ER130-2865-BD
Mk	Max. overturning torque	19600(N·m)	26950(N·m)	26950(N·m)
Mr	Max. torsional torque	26460(N·m)	23520(N·m)	23520(N·m)
Fv	Max. vertical force	19250(N)	30000(N)	34000(N)
Fh	Max. horizontal force	13200(N)	18600(N)	16500(N)

Fig 1.9 Robot base force

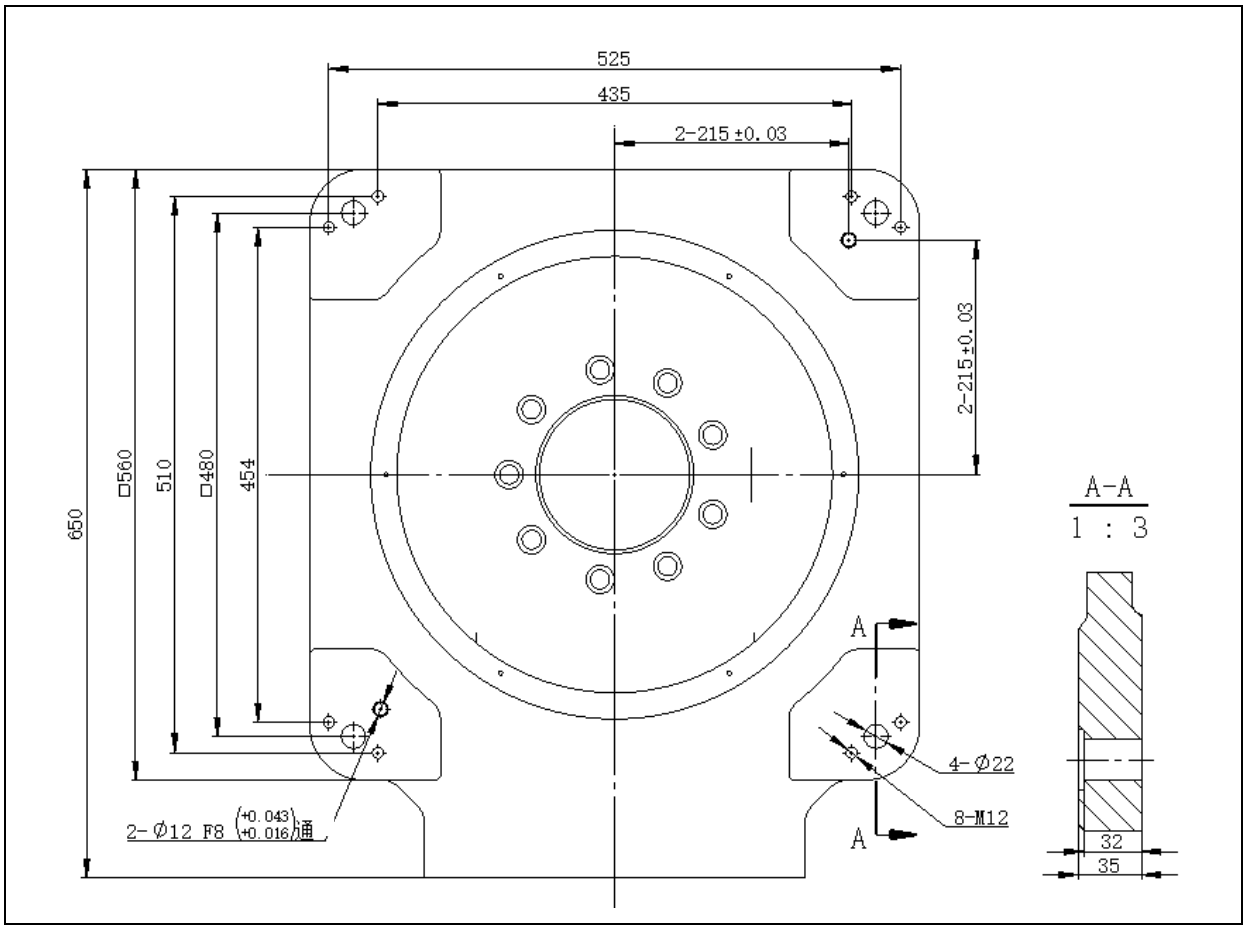

Fig 1.10 Robot base mounting dimension(ER45-2200-BD)

Tab 1.1 Robot fixing components(ER45-2200-BD)

Item and model	Amount
Fixed screw: M20X65 (GB/T 70.1 level 12.9)	4
Spring washer: Spring washer 20 (GB/T 93)	4
Positioning pin: Cylindrical pin 12X60 (GB/T120.2)	2

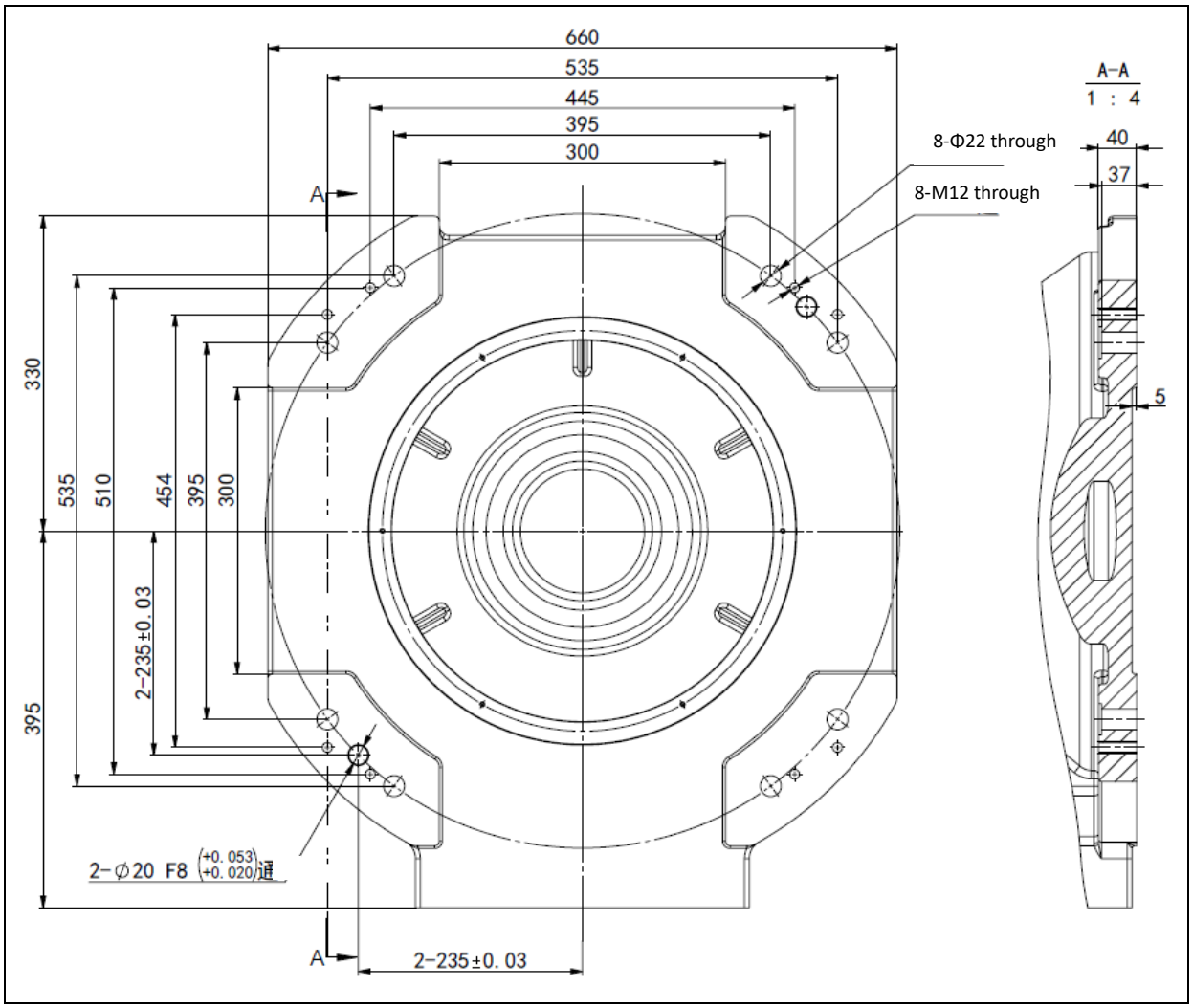

Fig 1.11 Robot base mounting dimension(ER80B-2565-BD,ER130-2865-BD)

Tab 1.2 Robot fixing components(ER80B-2565-BD,ER130-2865-BD)

Item and model	Amount
Fixed screw: M20X65 (GB/T 70.1 level 12.9)	8
Spring washer: Spring washer 20 (GB/T 93)	8
Positioning pin: Cylindrical pin 20X60 (GB/T120.2)	2

INFO

Positioning pin can minimize the influence on current program caused by re-installation or replacement of the robot. If the recovery of programmed path is needed, perform adjustment. If not, positioning pin can be eliminated.

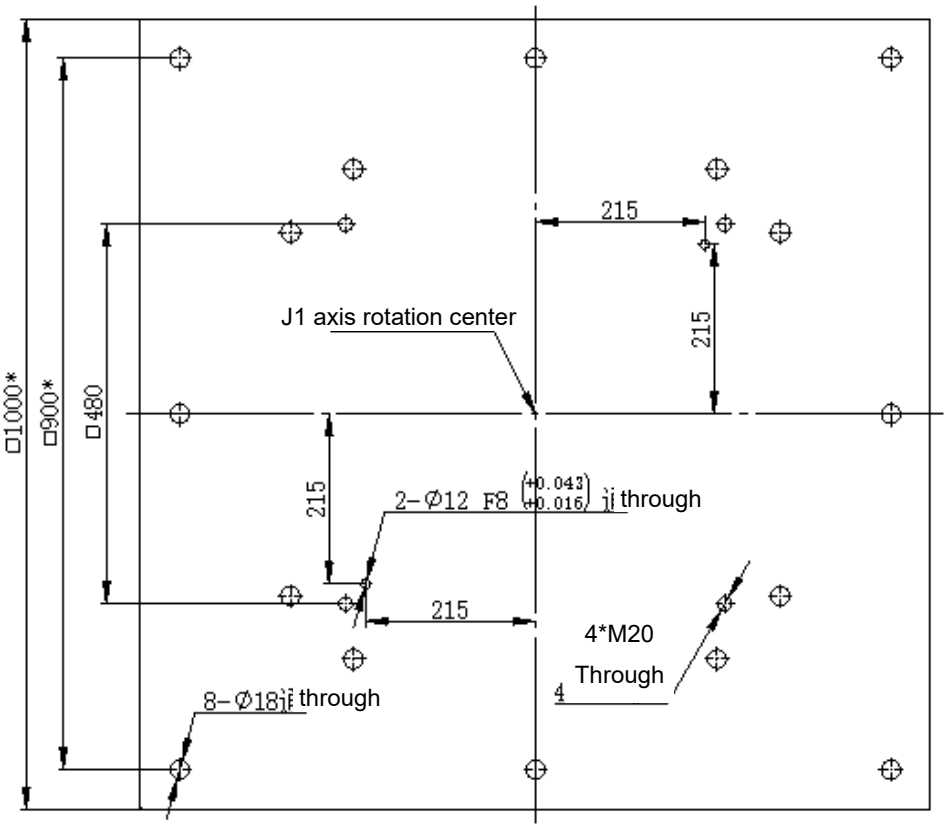

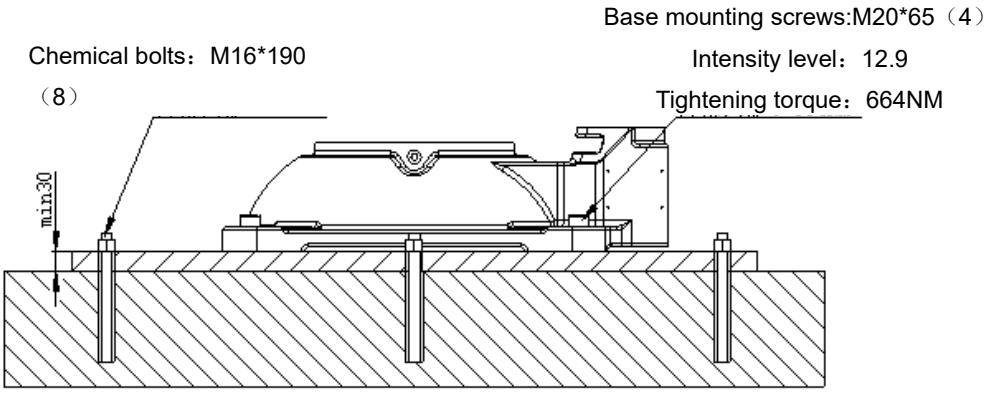

Note：When installing the iron plate on the ground, the robot mounting iron plate is fixed to the concrete floor by 8 M16X190 chemical bolts, the concrete thickness is at least 160mm, and the effective area is 1000mmx1000mm. The base is fixed to the iron plate by the parts listed in the table above.

The dimensions marked with * in the figure are the recommended sizes. If the user needs to change, he needs to consider the force of the robot on the base and the structure of the base, and can only be changed after strict calculation.

Fig 1.12 Robot mounting plate dimension(ER45-2200-BD)

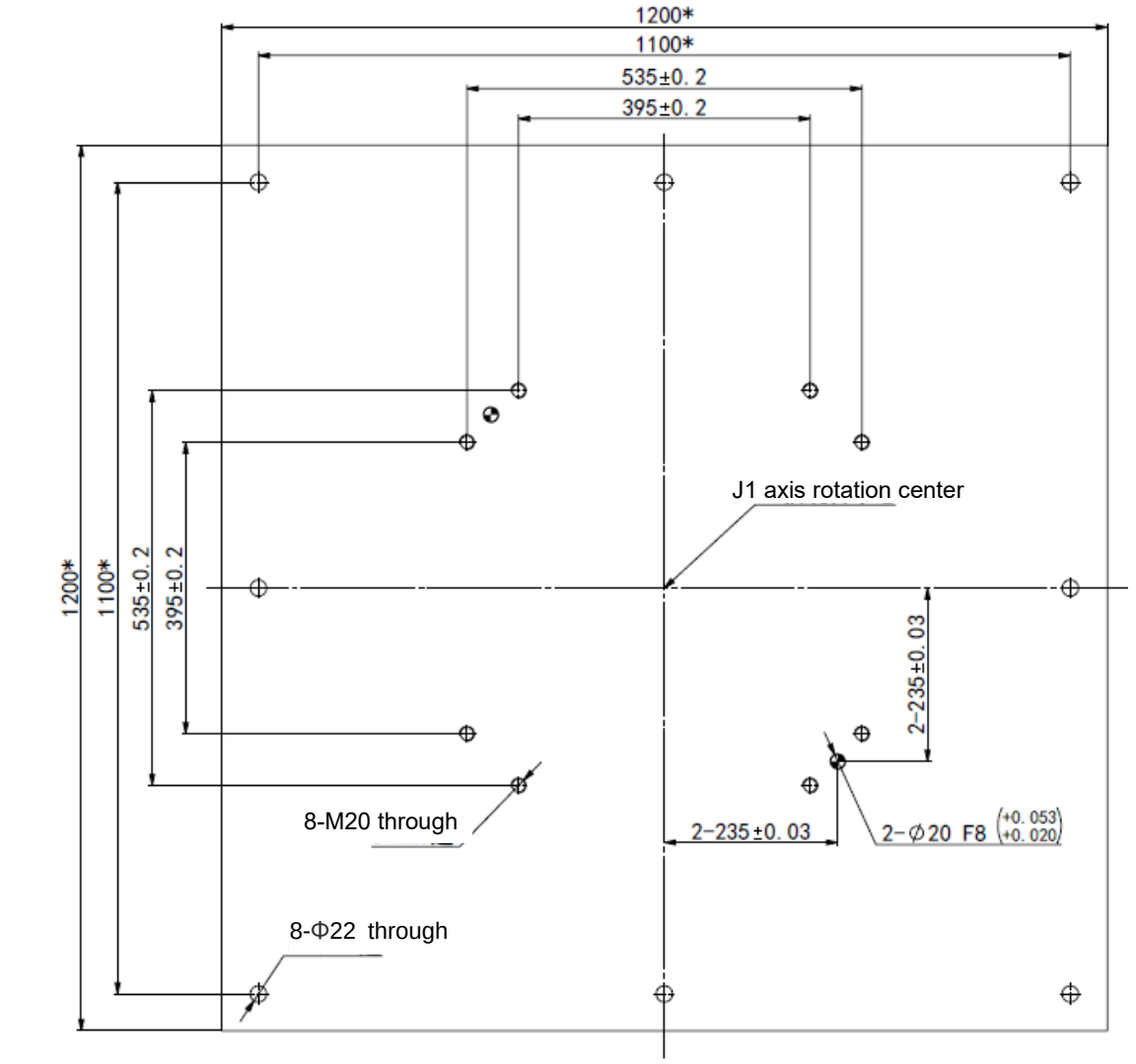

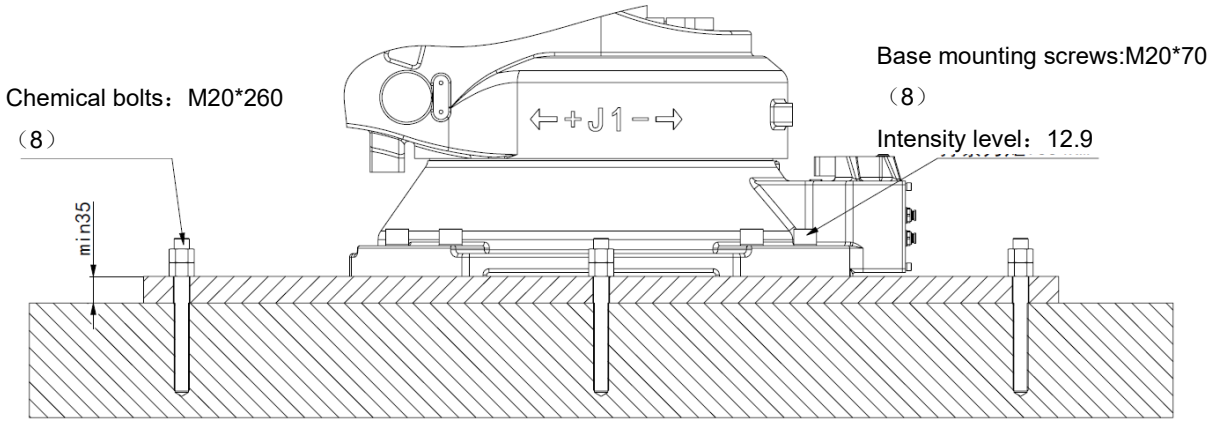

Note：When installing the iron plate on the ground, the robot installation iron plate is fixed to the concrete floor through 8 M20X260 chemical bolts, the concrete thickness is at least 190mm, and the effective area is 1300mmx1300mm. The base is fixed to the iron plate by the parts listed in the table above.

The dimensions marked with * in the figure are the recommended sizes. If the user needs to change, he needs to consider the force of the robot on the base and the structure of the base, and can only be changed after strict calculation

Fig 1.13 Robot mounting plate dimension(ER80B-2565-BD, ER130-2865-BD)

1.3. INSTALLATION CONDITIONS

CAUTION	**Damage of the cable jacket may cause water intrusion. Take care when installing the cable and exchange it if it is damaged.**

See the table below about installation conditions. Robot storage conditions are also listed in case that the robot needs to be stored for a period of time.

Foundation	
Max. surface roughness	0.5mm
Max. inclination angle	5°
Storage condition	
Min. ambient temperature	-25℃
Max. ambient temperature	+55℃
Min. ambient temperature	95%RH
Protection level	
ER45-2200-BD ER80B-2565-BD ER130-2865-BD	IP54

Performance of resistant chemicals and resistant solvents is listed below.

(1) The robot (including severe dust/liquid protection model) cannot be used with the following liquids. Potentially these liquids will cause irreversible damage to the rubber parts (such as gaskets, grease seals, O-rings etc.). (As exception to this only liquids tested and approved by ESTUN can be used with the robot).
   (a)Organic solvents
   (b)Cutting fluid including chlorine/gasoline
   (c)Amine type detergent
   (d)Acid, alkali and liquid causing rust
   (e)Other liquids or solutions that will harm NBR or CR rubber

(2) When the robots work in the environment, using water or liquid, complete draining of J1 base must be done. Incomplete draining of J1base will make the robot break down.

(3) Do not use unconfirmed liquid.

(4) Do not use the robot immersed in water, neither temporary nor permanent. Robot must not be wet permanently. Example: in case motor surface is exposed to water for a long time, liquid may invade inside the motor and cause failure.

2. Connection with the controller

The figure below shows the cables connect the robot with the controller. Connect these cables on the back of the base.

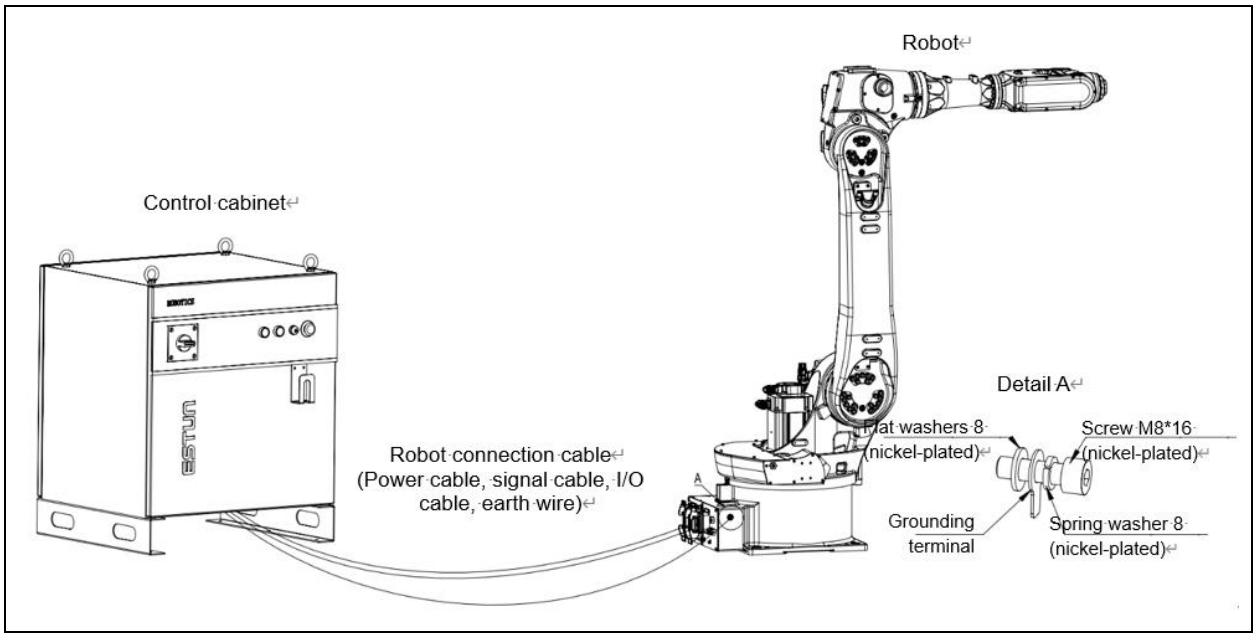

Fig 2.1 Cable connection

CAUTION

- **The serial number of the robot body must match the serial number of the control cabinet. Incorrect serial number matching will result in robot accuracy deviation.**
- **Before connecting the power of the control device, connect the robot and the control device through the ground wire. If the ground wire has not been connected, there is a risk of electric shock.**
- **The grounding wire should be installed between the flat washer and the spring washer, the grounding position of the robot has a small amount of anti-rust grease, please clean it before grounding.**

3. Specifications

3.1.ROBOT CONFIGURATION

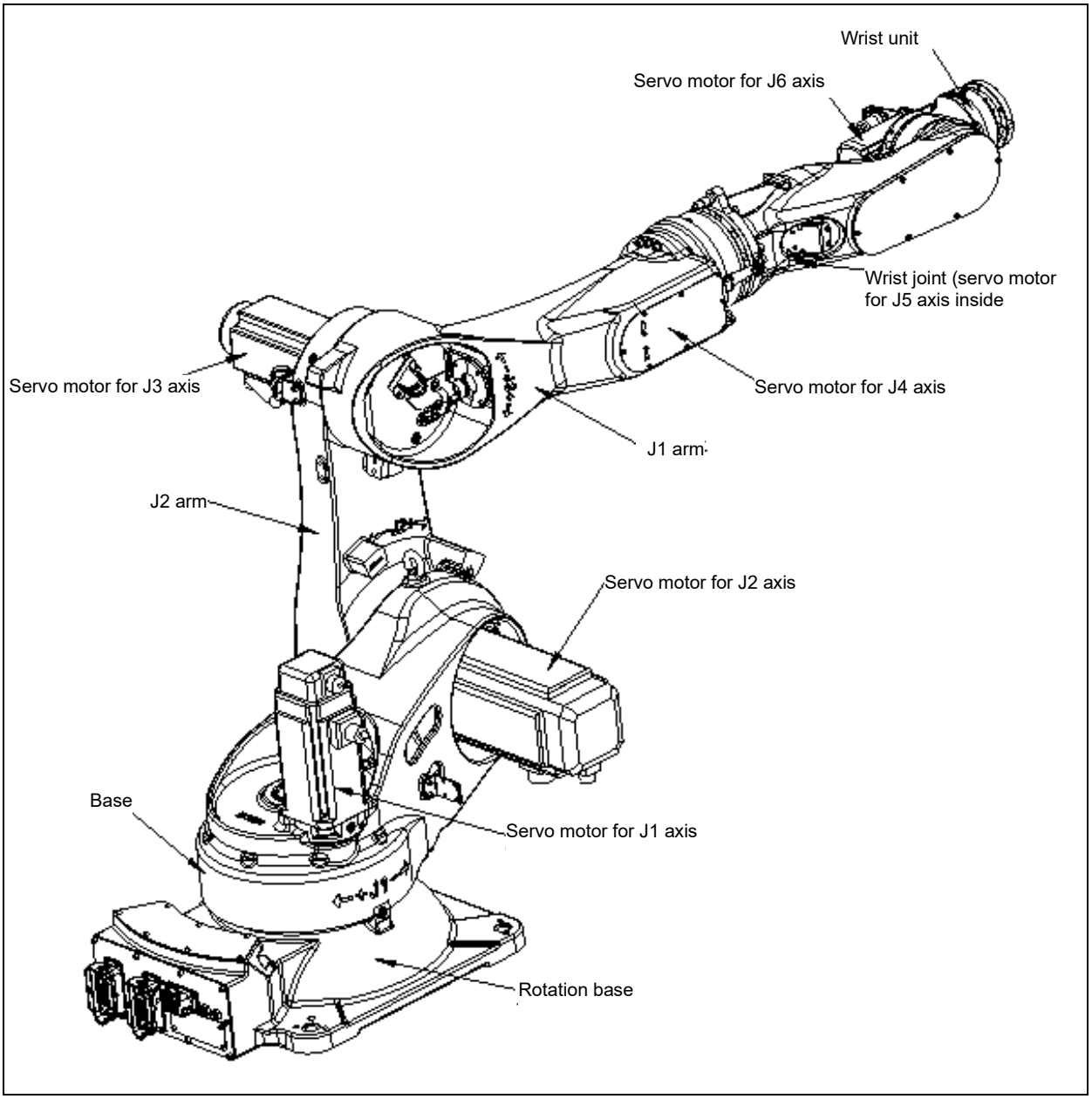

Fig 3.1 Robot Configuration(ER45-2200-BD)

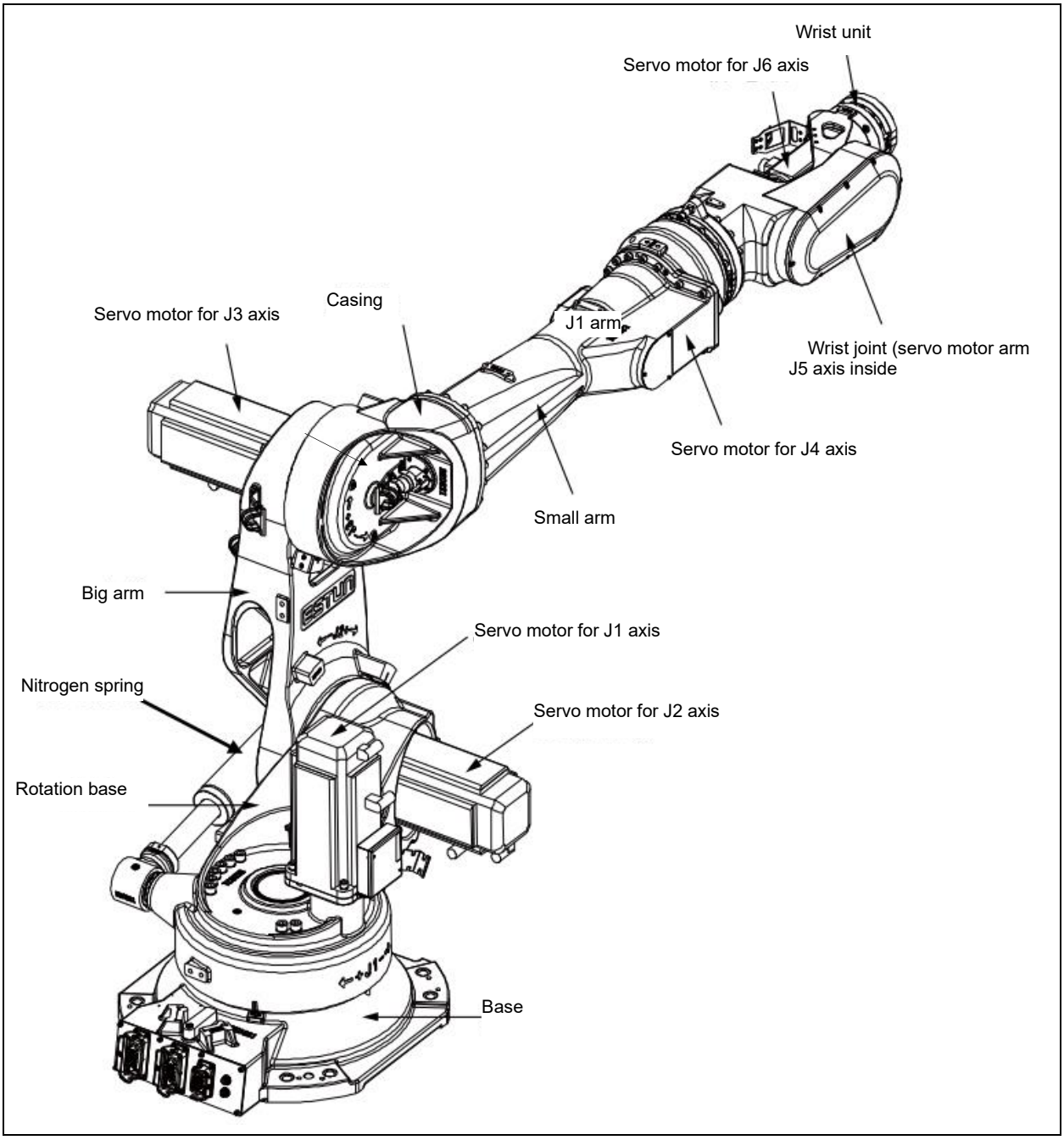

Fig 3.2 Robot Configuration(ER80B-2565-BD,ER130-2865-BD)

Tab 3.1 Specifications

Model		ER45-2200-BD	ER80B-2565-BD	ER130-2865-BD
Type		Articulated robot		
Controlled axis		6 axes(J1，J2，J3，J4，J5，J6)		
Installation		Floor		
Motion range	J1-axis	±190°	±185°	±180°
	J2-axis	-70°~+110°	-67°~+150°	-70°~+90°
	J3-axis	-95°~+62°	-190°~+66°	-200°~+68°
	J4-axis	±200°	±200°	±200°
	J5-axis	±130°	±130°	±125°
	J6-axis	±360°	±360°	±360°
Max. speed (Note 1)	J1-axis	172°/s	114°/s	112°/s
	J2-axis	119°/s	108°/s	106°/s
	J3-axis	189°/s	133°/s	106°/s
	J4-axis	284°/s	255°/s	204°/s
	J5-axis	247°/s	197°/s	198°/s
	J6-axis	355°/s	285°/s	212°/s
Max. payload	At wrist	45kg	80kg	130kg
Allowable load inertia at wrist	J4-axis	14.7 kg.m2	43.95 $kg.m^2$	111.1 $kg.m^2$
	J5-axis	14.7 kg.m2	43.95 $kg.m^2$	111.1 $kg.m^2$
	J6-axis	7.7 kg.m2	40 $kg.m^2$	89.4 $kg.m^2$
Allowable load torque at wrist	J4-axis	196.7 N.m	336 N.m	688 N.m
	J5-axis	196.7 N.m	336 N.m	688 N.m
	J6-axis	44.1N.m	95 N.m	127.4 N.m
Drive method		Electric servo drive by AC servo motor		
Repeatability		±0.03mm	±0.04mm	±0.04mm
Reach		2200mm	2565mm	2865mm
Weight		520kg	730kg	950kg
Installation environment		Ambient temperature: 0～45℃ (Note 2) Ambient humidity: 20～80%RH Height: Up to 1000 meters above the sea level required Vibration acceleration: 4.9 m/s^2 (0.5G) or less Free of corrosive gases (Note 3)		

(Note 1) During short distance motions, the axis speed may not reach the maximum value stated. The maximum speed is measured at zero position of the robot, and will be limited by the position of other axes.

(Note 2) When the robot is used in low temperature environment that is near 0℃ or not operated for a long time in the environment that is less than 0℃ in a holiday or the night, collision detection alarm may occur since the resistance of the drive mechanism could be high immediately after starting the operation. In this case, we recommend performing the warm up operation for several minutes.

(Note 3) Contact the service representative, if the robot is to be used in an environment or a place subjected to hot/cold temperatures, severe vibrations, heavy dust, cutting grease splash and or other foreign substances.

3.2. EXTERNAL DIMENSIONS AND OPERATING SPACE

The following figures show the robot operating space, for the reference of robot installation. When install peripheral devices, be careful not to interfere with the robot and its motion range.

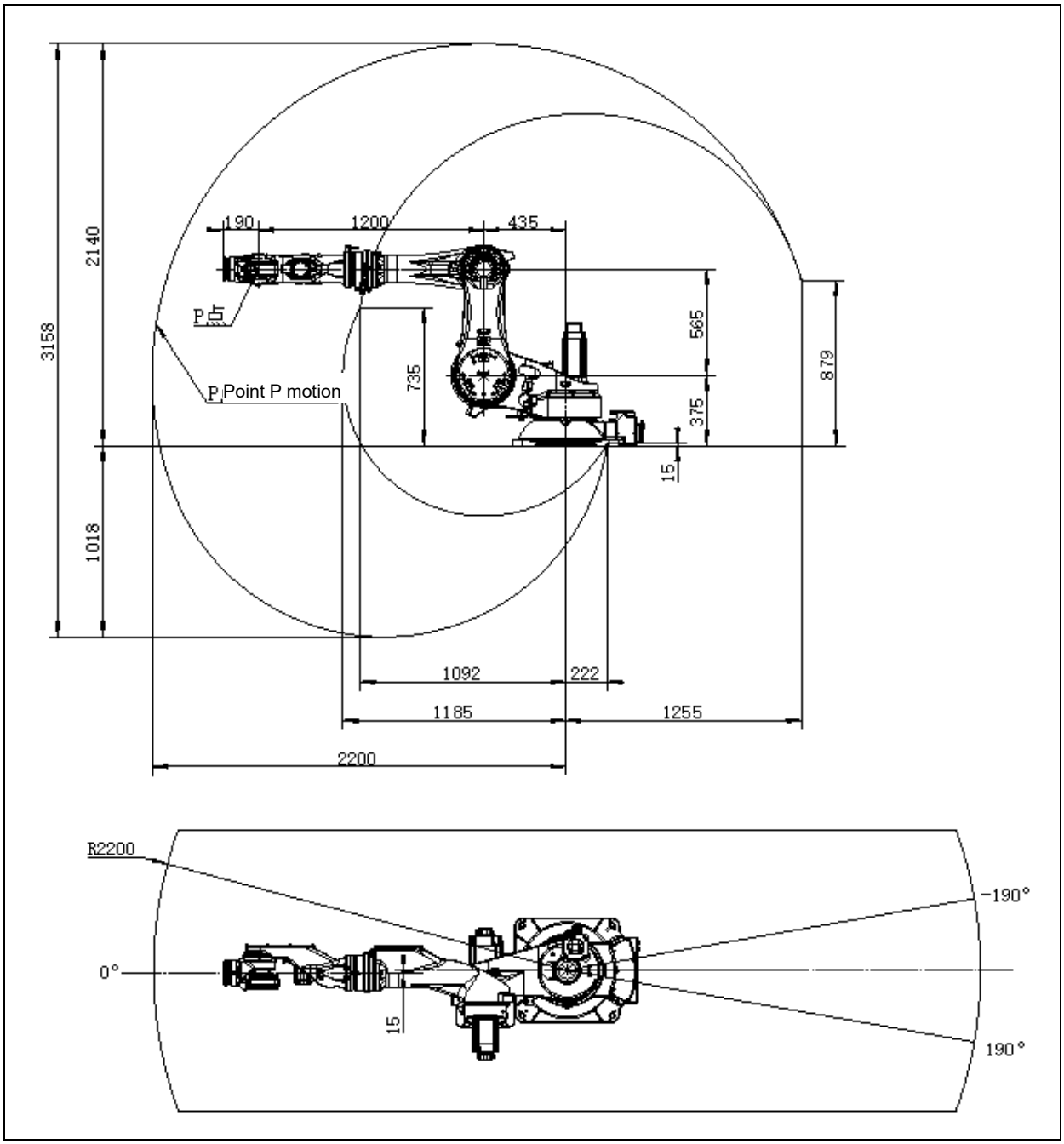

Fig 3.3 Motion range (ER45-2200-BD)

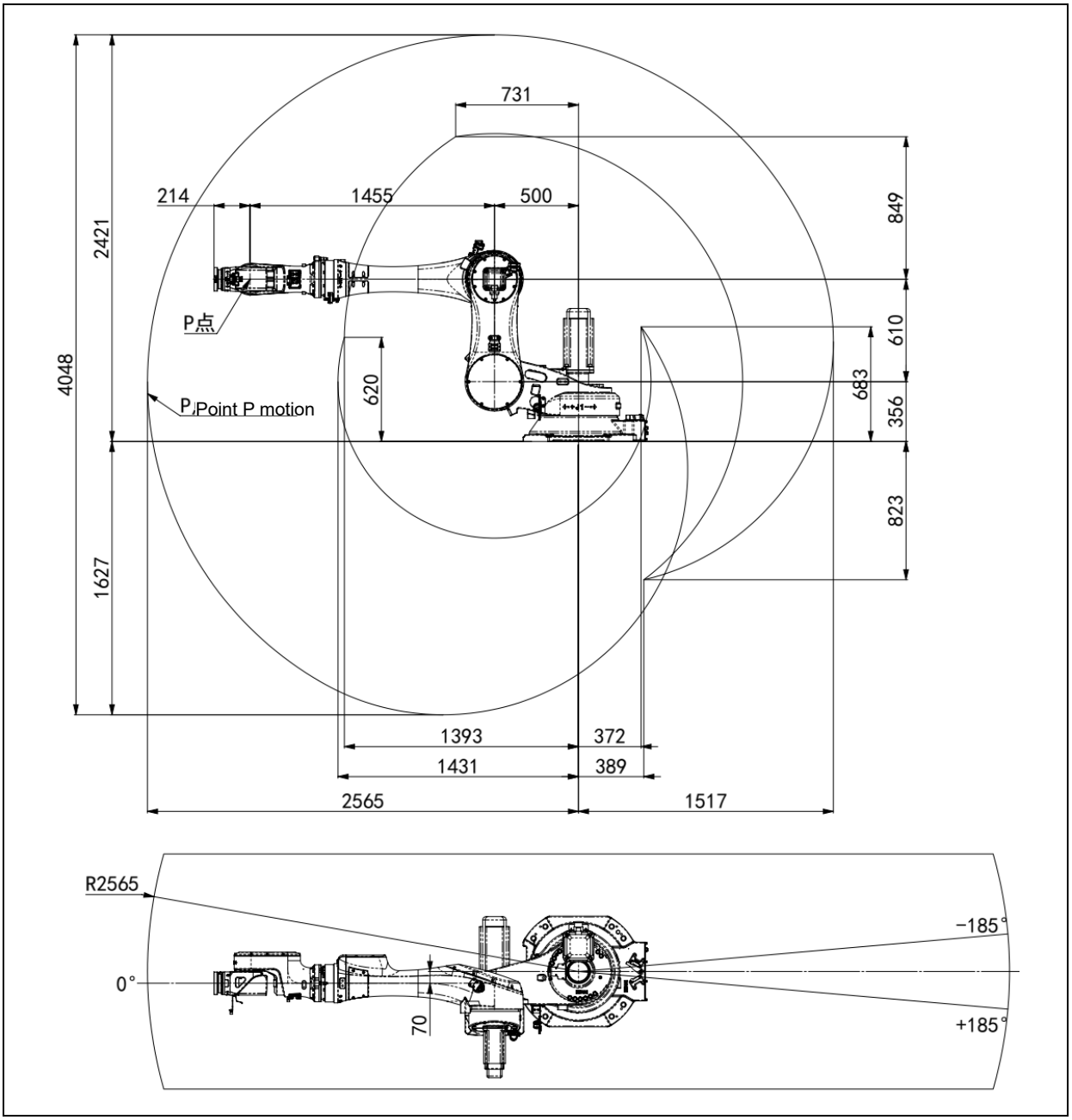

Fig 3.4 Motion range (ER80B-2565-BD)

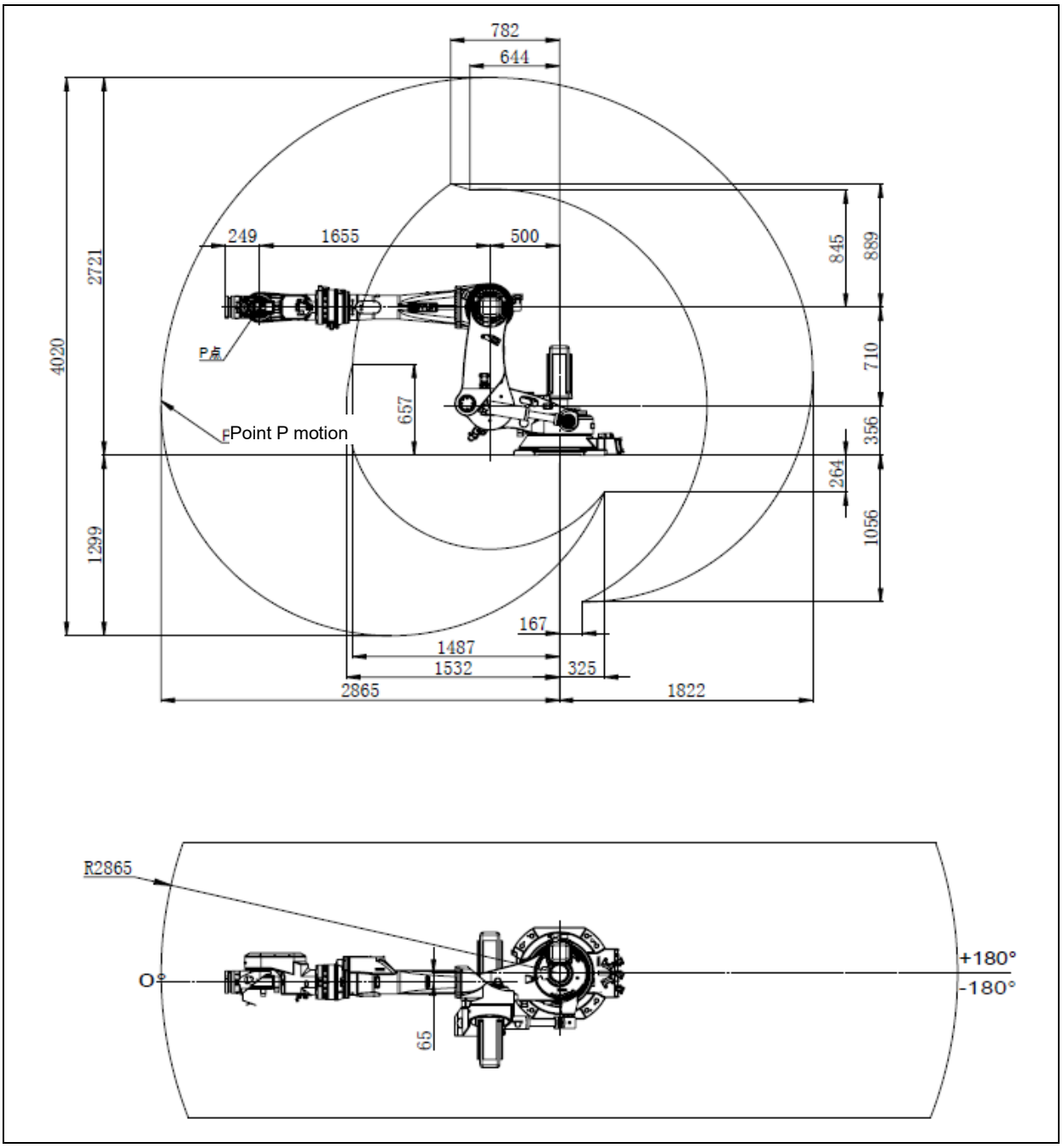

Fig 3.5 Motion range (ER130-2865-BD)

3.3. ZERO POINT POSITION AND MOTION LIMIT

Zero point and motion range are provided for each controlled axis. Exceeding the software motion limit of a controlled axis is called overtravel (OT). Overtravel is detected at both ends of the motion limit for each axis. The robot cannot exceed the motion range unless there is a loss of zero point position due to abnormalities in servo system or system error. In addition, the motion range limit by a fixed mechanical stopper is also prepared to improve safety.

CAUTION

Do not reconstruct the fixed mechanical stopper. There is a possibility that the robot doesn't stop normally.

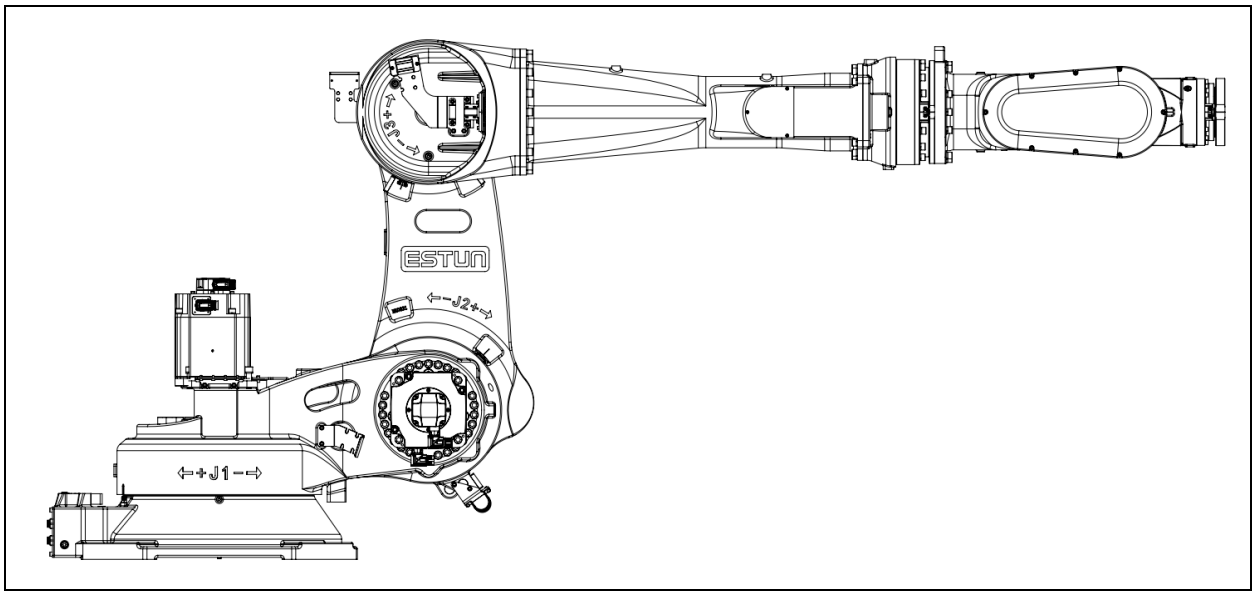

Fig 3.6 Zero point position

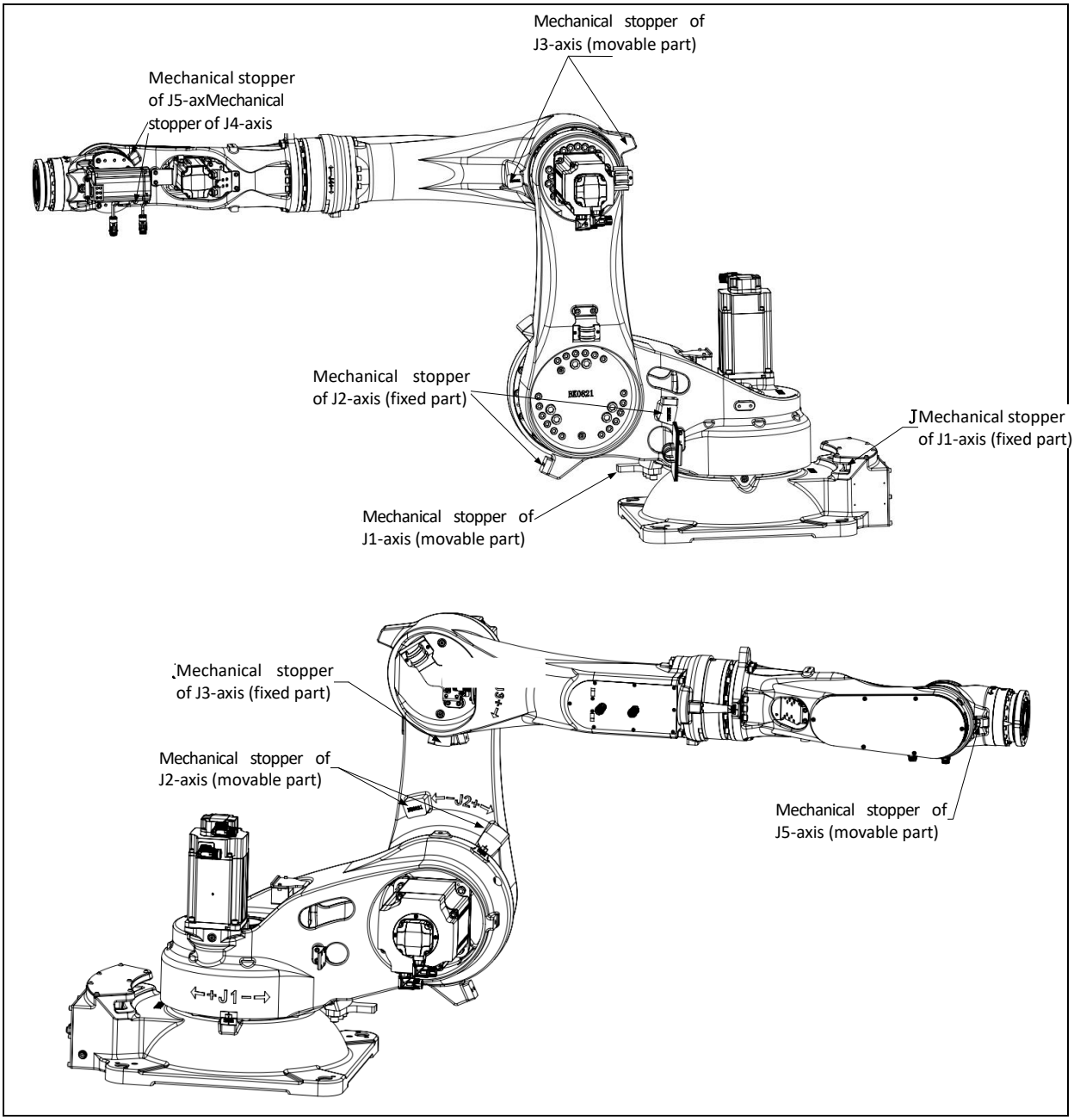

Fig 3.7 Mechanical stoppers (ER45-2200-BD)

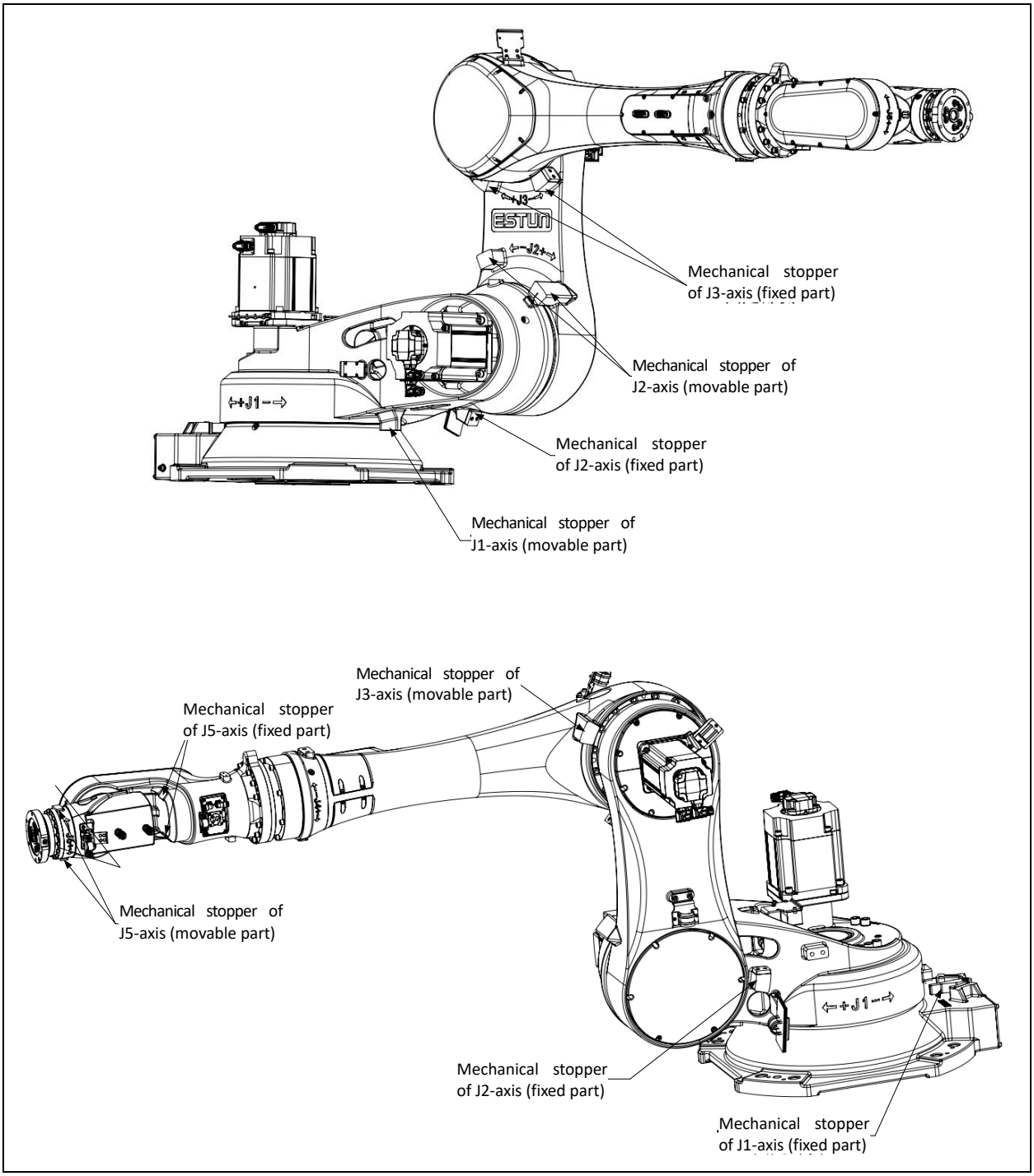

Fig 3.8 Mechanical stoppers (ER80B-2565-BD)

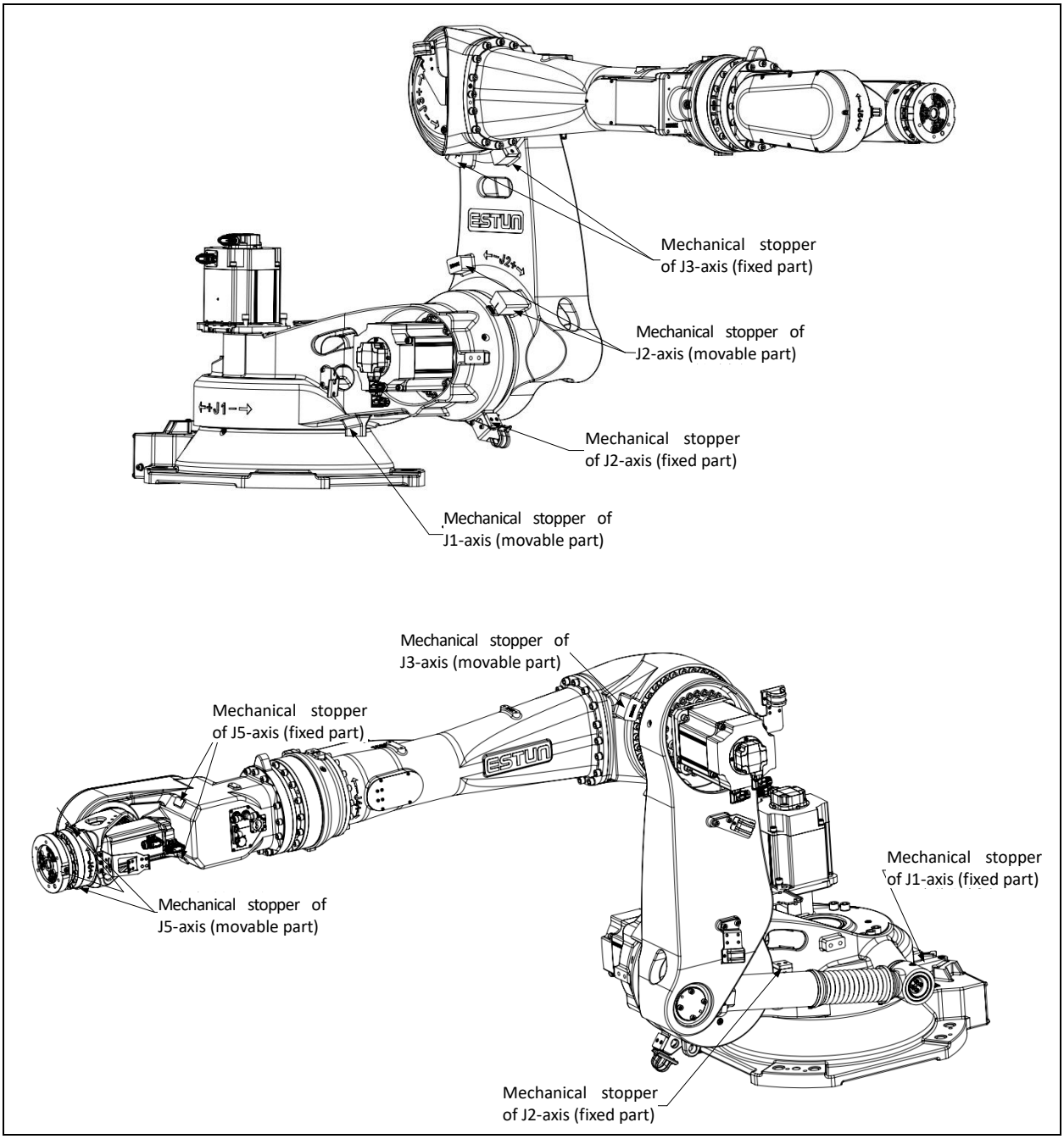

Fig 3.9 Mechanical stoppers (ER130-2865-BD)

Refer to system operation manual for more information about setting motion range.

3.4. WRIST LOAD CONDITION

Robot load capacity (including weight of gripper or welding gun) coincides with robot model. Observe restrict of load torque and load inertia strictly.

CAUTION

Overload the robot may result in a worse movement performance on the robot or a reduction of service time on the reducer.

Payloads include total weight of tools such as grippers, welding guns, tool convertors, dampers, etc. If payload exceeds allowable value, it is necessary to consult ESTUN representatives.

Refer to ESTUN robot bearing capacity calculation table when calculate load torque and load inertia. Contact ESTUN sales representatives for more detail.

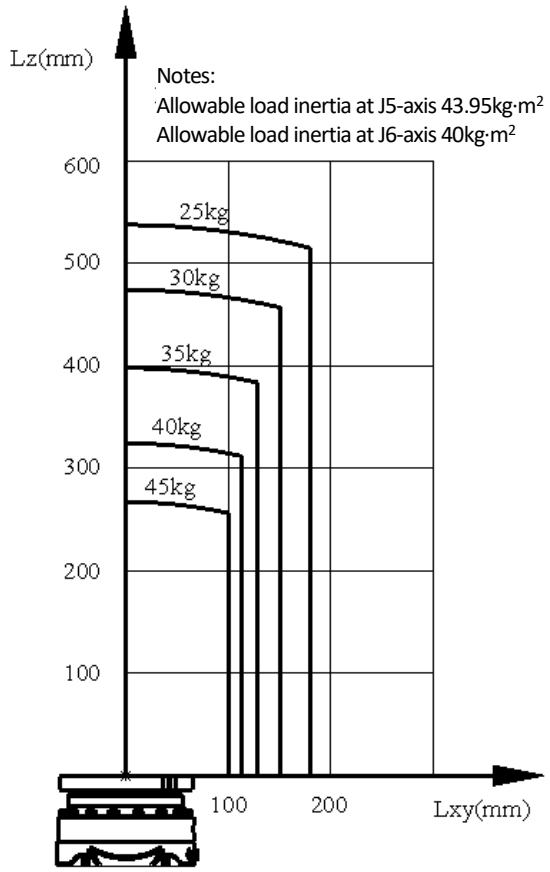

Fig 3.10 Load capacity at wrist (ER45-2200-BD)

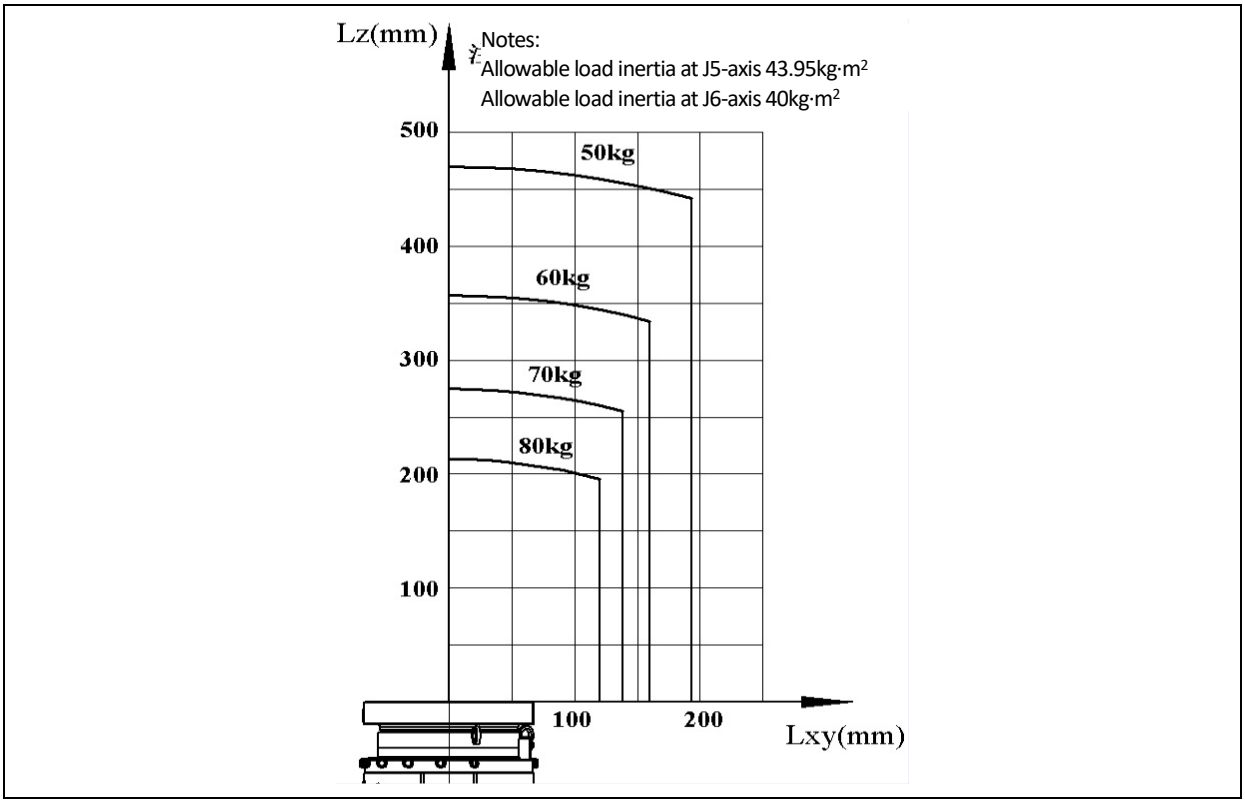

Fig 3.11 Load capacity at wrist (ER80B-2565-BD)

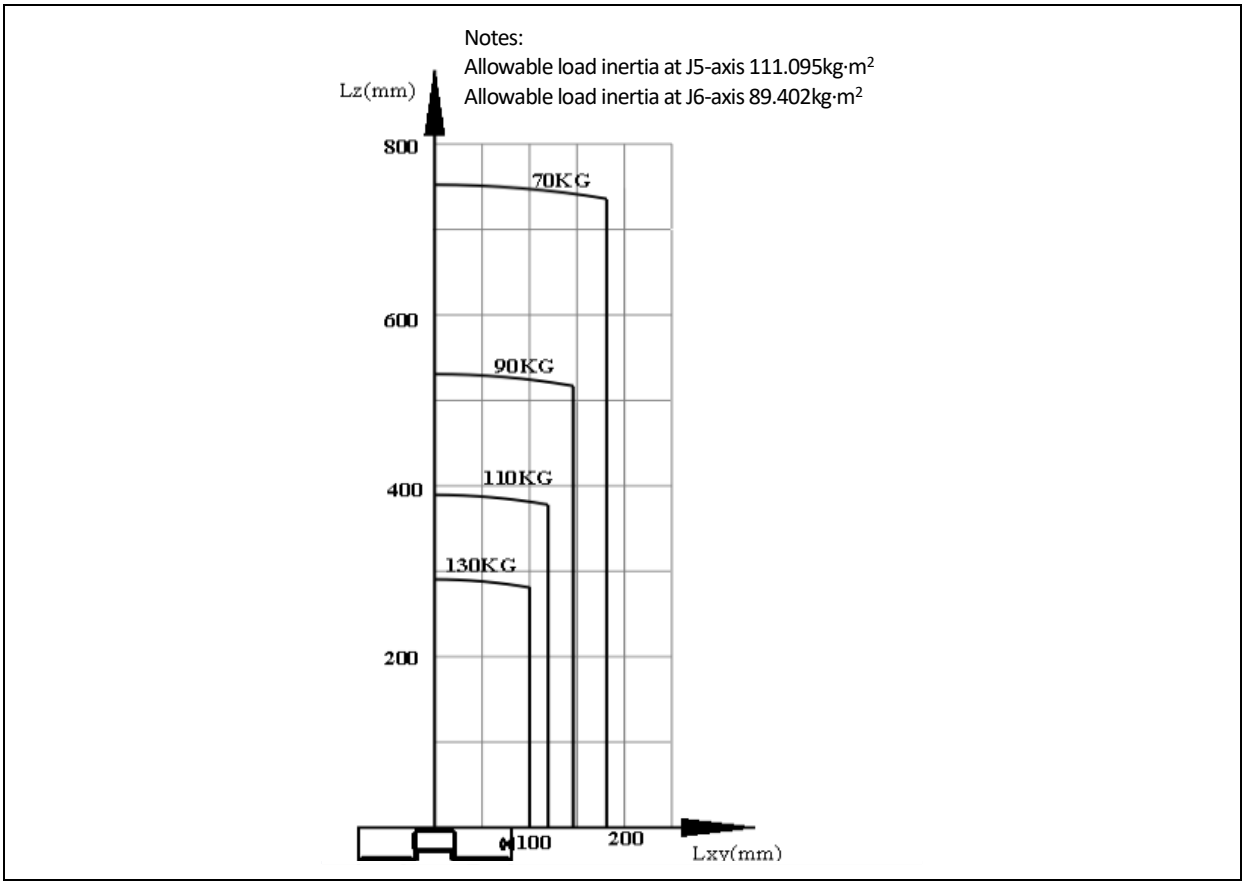

Fig 3.12 Load capacity at wrist (ER130-2865-BD)

4. Equipment installation

4.1. FLANGE DIMENSION

This section describes the mounting face dimension of the end effector. Consider the depth of the screw holes and pin holes sufficiently before choose the length of the bolts and pins. Antirust measures of screws, grippers, etc., should be considered as well.

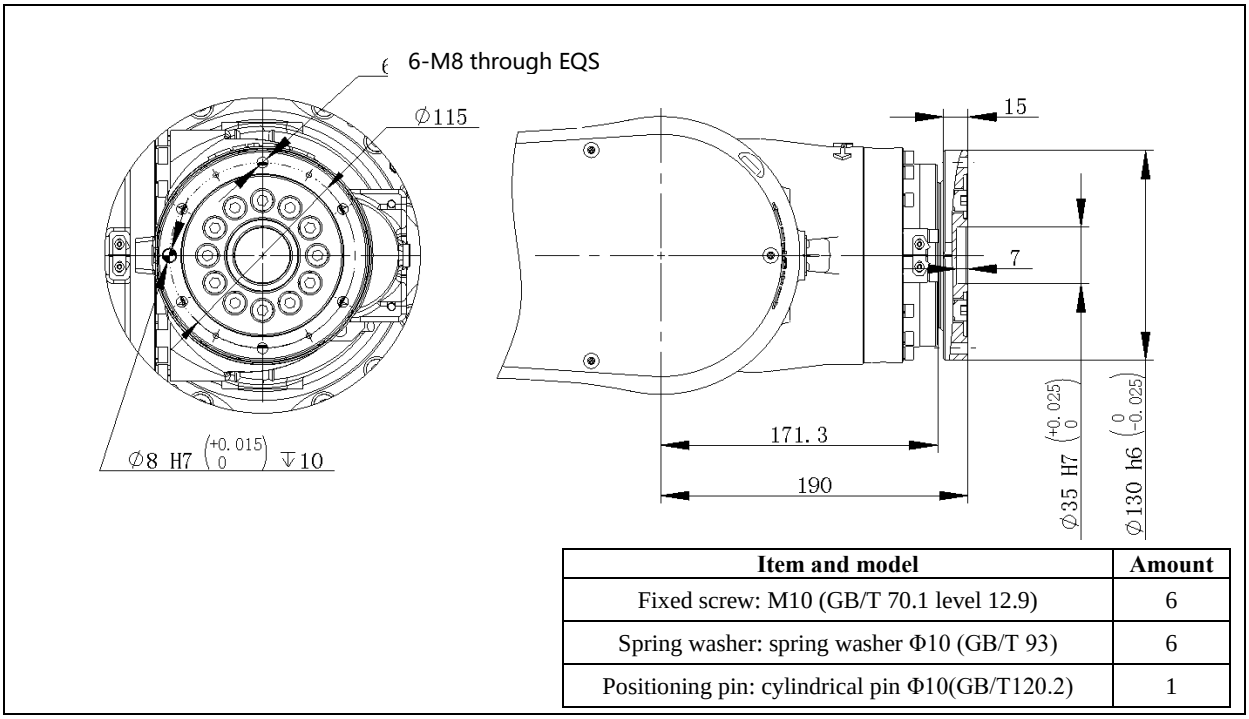

Item and model	Amount
Fixed screw: M10 (GB/T 70.1 level 12.9)	6
Spring washer: spring washer Φ10 (GB/T 93)	6
Positioning pin: cylindrical pin Φ10(GB/T120.2)	1

Fig 4.1 End flange mounting dimension (ER45-2200-BD)

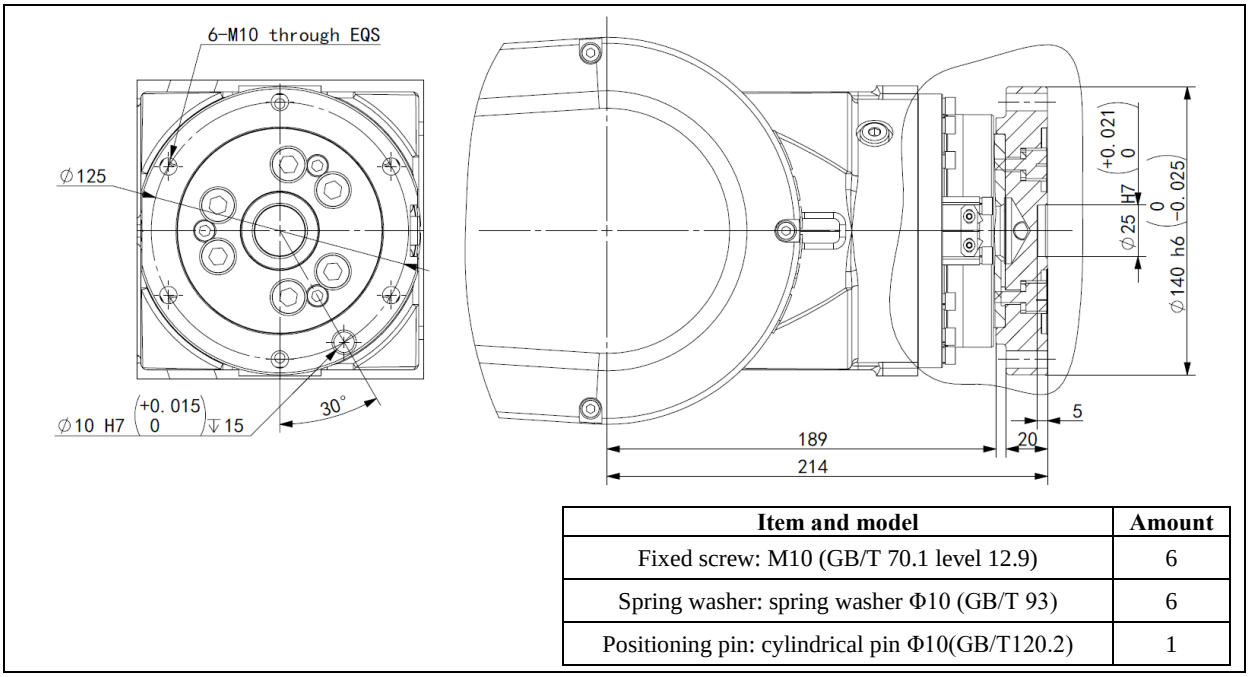

Item and model	Amount
Fixed screw: M10 (GB/T 70.1 level 12.9)	6
Spring washer: spring washer Φ10 (GB/T 93)	6
Positioning pin: cylindrical pin Φ10(GB/T120.2)	1

Fig 4.2 End flange mounting dimension (ER80B-2565-BD)

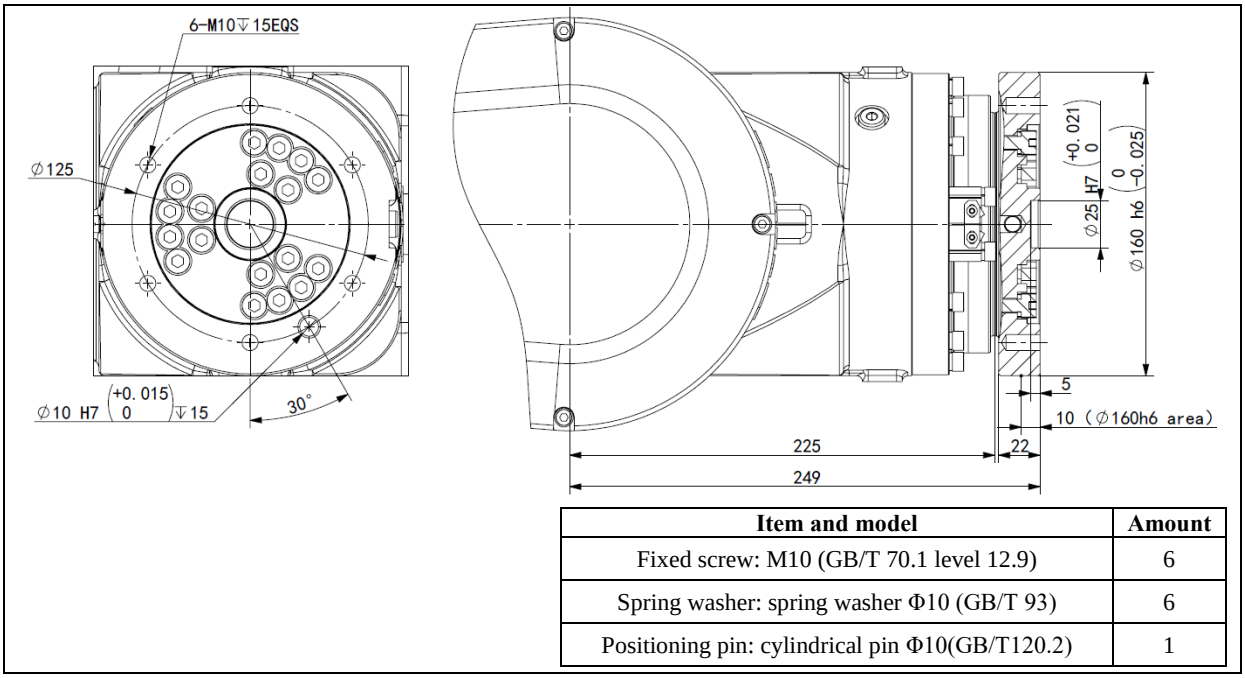

Item and model	Amount
Fixed screw: M10 (GB/T 70.1 level 12.9)	6
Spring washer: spring washer Φ10 (GB/T 93)	6
Positioning pin: cylindrical pin Φ10(GB/T120.2)	1

Fig 4.3 End flange mounting dimension (ER130-2865-BD)

4.2. EQUIPMENT MOUNTING FACE

As shown in the figures below, tapped holes are provided to install equipment to the robot.

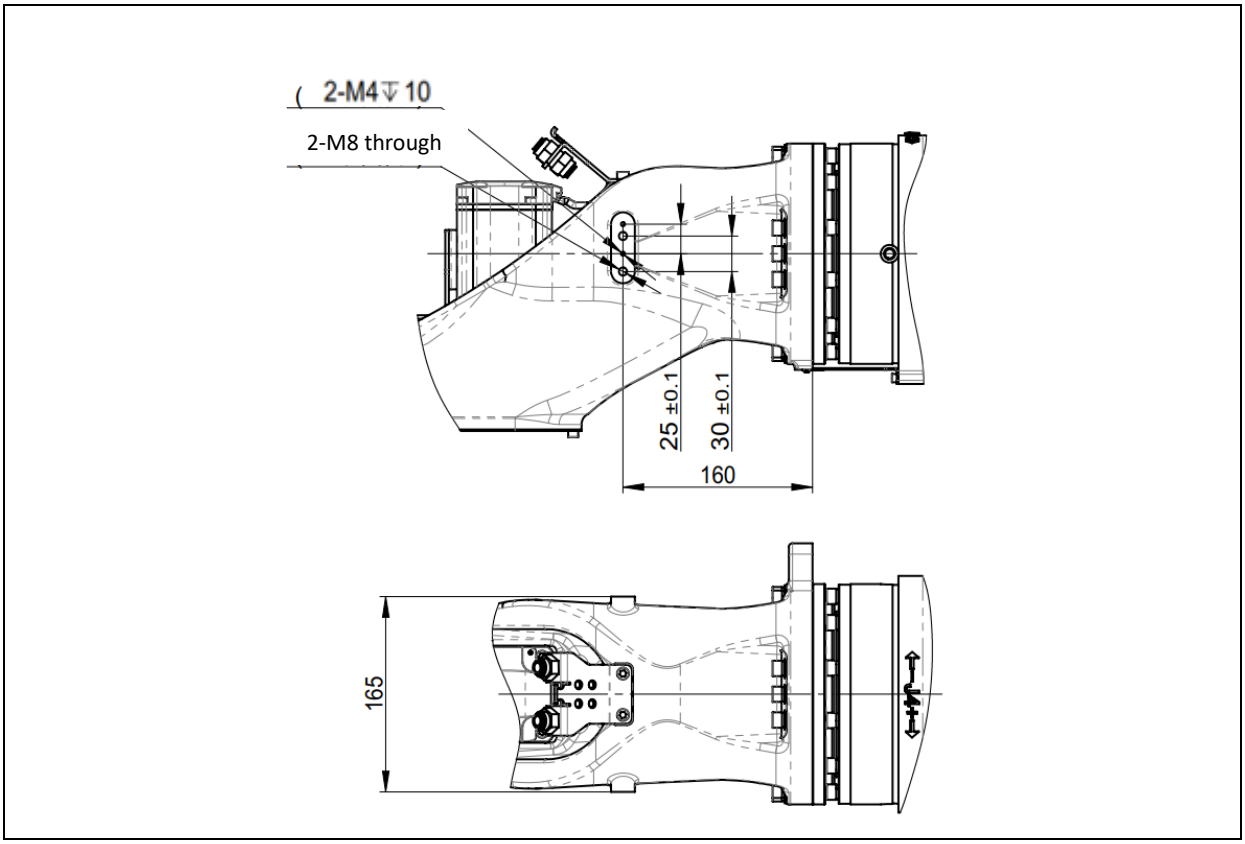

Fig 4.4 Equipment mounting face (ER45-2200-BD)

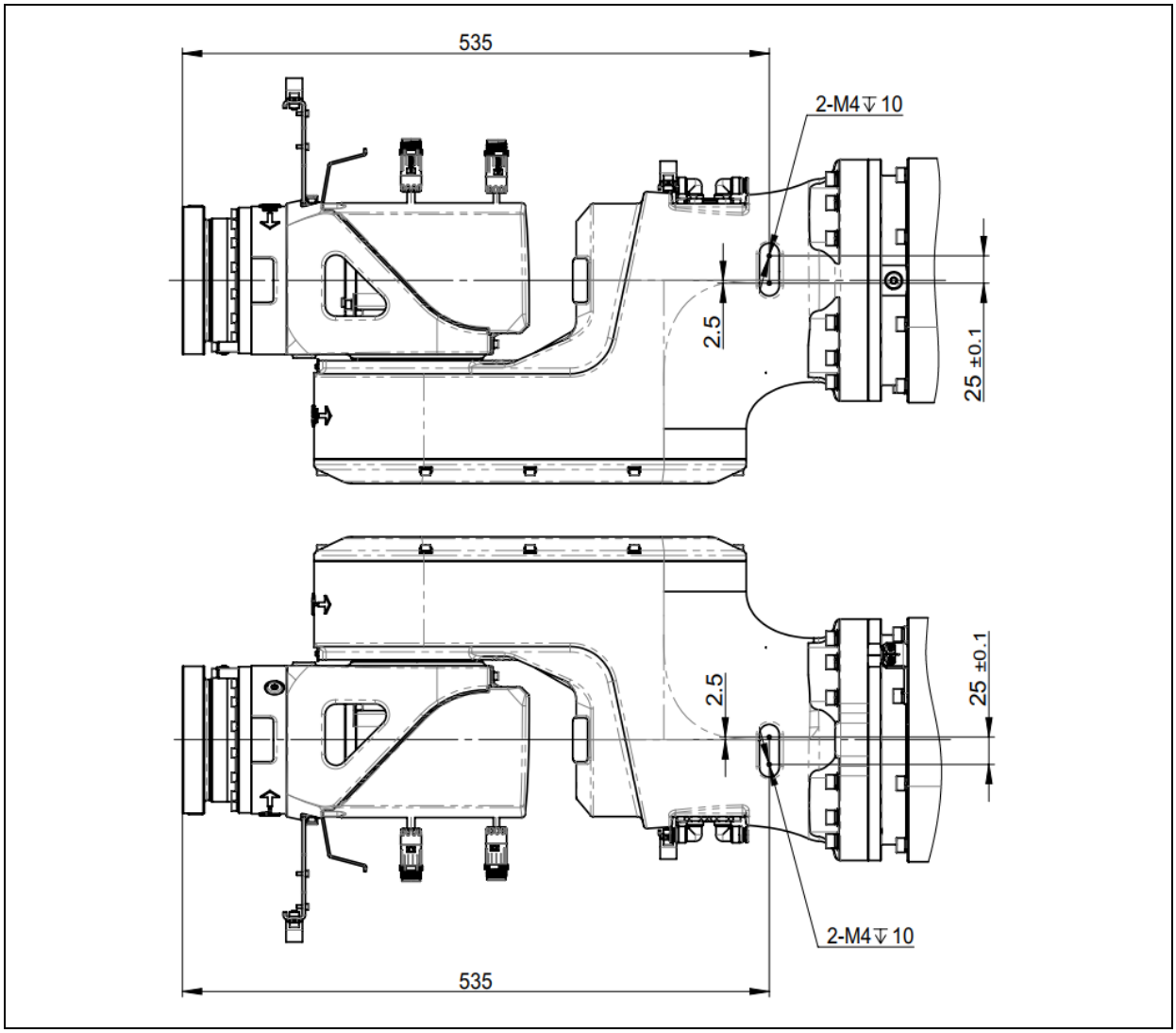

Fig 4.5 Equipment mounting face (ER80B-2565-BD)

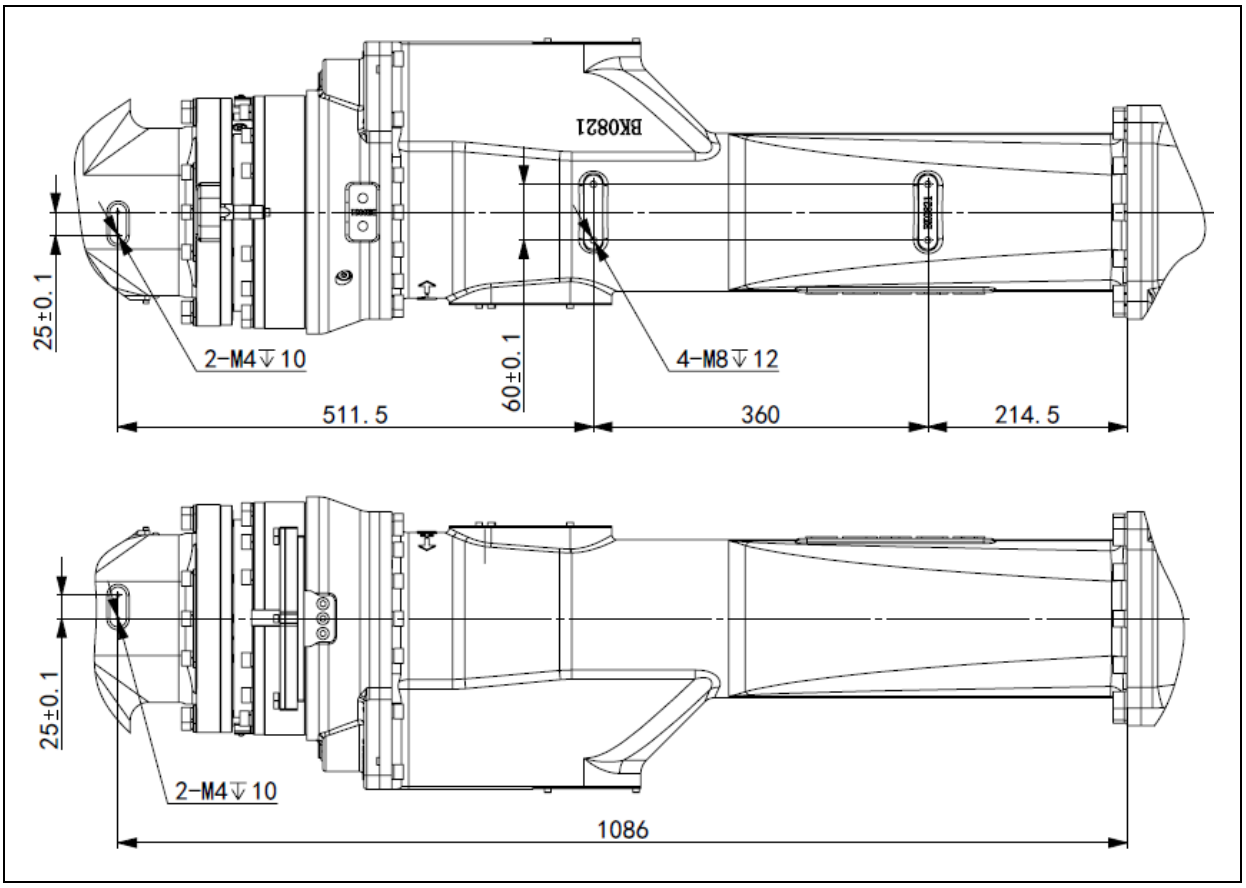

Fig 4.6 Equipment mounting face (ER130-2865-BD)

4.3. PIPES AND TUBES

The robot has inlets and outlets openings to supply air or hydraulic pressure to the end effector.

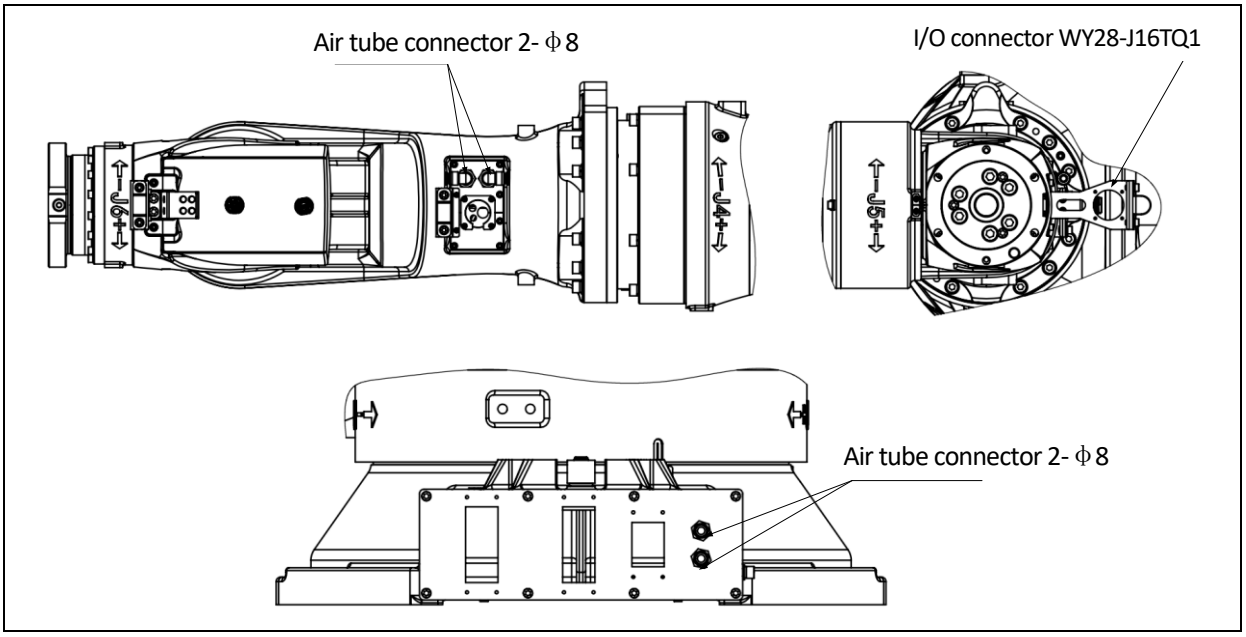

Fig 4.7 Pipes and tubes (ER80B-2565-BD)

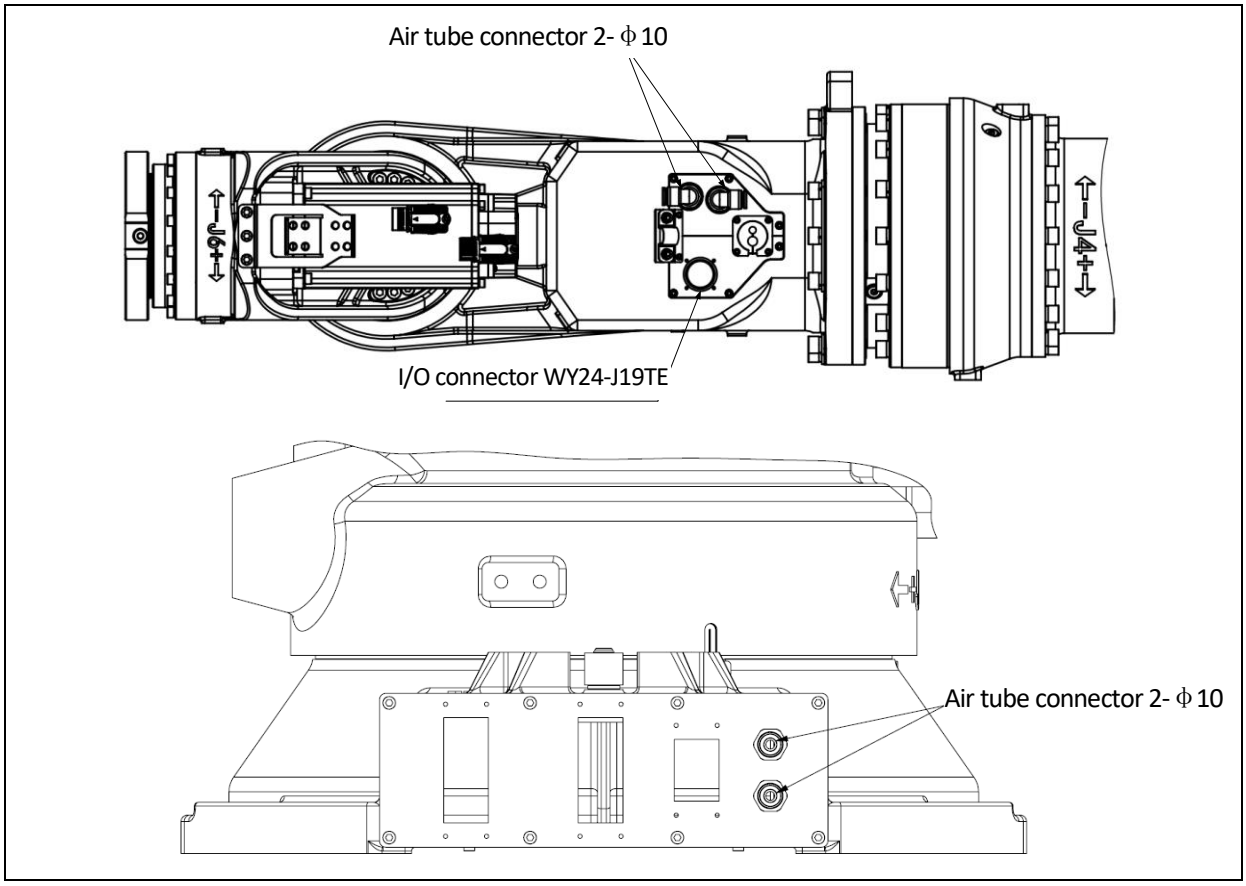

Fig 4.8 Pipes and tubes (ER130-2865-BD)

5. Maintenance, Repair and Warranty

Before performing any maintenance, be sure to read SAFETY PRECAUTIONS and understand the content.

> **CAUTION** **Never implement any maintenance unless the power of the robot is cut off.**

5.1. DAILY CHECKS

Check the items below before daily operation as occasion demands.

Item	Check item	Check points
1	Grease seepage	Check if there is grease on the sealed part. If there is an grease seepage, clean it.
2	Vibration, abnormal noises	Check if there is vibration or abnormal noises in each transmission mechanism. If there is vibration or abnormal noises, perform measures referring to section 7.2.
3	Positioning accuracy	Check whether the taught positions of the robot have not deviated from the previous taught positions. Check whether the stop position have not deviated from the previous stop positions.
4	Cooling fan in the cabinet	Check whether poor ventilation or abnormal noise occur in the cooling fan on the backside.
5	Peripheral cable set part	Check if there is missing parts, fray or rust.
6	Peripheral electrical equipment	Check whether the connection of peripheral electrical equipment or the button is normal. Check if there is any fray on the surface.
7	Warnings	Check whether unexpected warnings occur in the alarm screen on the teach pendant. If unexpected warnings occur, perform measures as described in the ALARM DISPLAY in Cabinet Operator's manual.

5.2. PERIODIC CHECKS AND MAINTENANCE

Check the items at the intervals recommended below based on the total time or the accumulated operating time, whichever comes first. Periodic checks keep the performance of the robot. The items below can be performed by yourself, or you can contact ESTUN for maintenance service.

Check and maintenance intervals (Operating time, Accumulated operating time)							Check and maintenance item	Check points, management and maintenance method
1 month 320h	3 months 960h	half a year 1920h	1 year 3840h	1.5 years 5760h	3 years 11520h	4 years 15360h		
○ Only 1st check	○						Cleaning the controller ventilation system	Confirm the controller ventilation system is not dusty. If dust has accumulated, remove it.
	○						Check the external damage or peeling	Check whether the robot has external damage or peeling paint due to the interference with the peripheral equipment. If an interference

							paint	occurs, eliminate the cause. Also, if the external damage is serious, and causes a problem in which the robot will not operate, replace the damaged parts.
○ Only 1st check	○						Check damages of the cable protection sheaths	Check whether the cable protection sheaths of the mechanical unit cable have holes or tears. If damage is found, replace the cable protection sheath. If the cable protection sheath is damaged due to the interference with peripheral equipment, eliminate the cause.
		○					Inspection of gas spring	Check if the gas spring cylinder contains normal pressure and if the piston rob shows any sign of wear.
	○						Check for water	Check whether the robot is subjected to water or cutting greases. If water is found, remove the cause and wipe off the liquid.
	○ Only 1st check		○				Check for damages to the teach pendant cable, the cabinet connection cable or the robot connection cable	Check whether the cable connected to the teach pendant, cabinet and robot are unevenly twisted or damaged. If damage is found, replace the damaged cables.
○ Only 1st check			○				Check for damage to the mechanical unit cable (movable part)	Observe the movable part of the mechanical unit cable, and check for damage. Also, check whether the cables are excessively bent or unevenly twisted.
	○ Only 1st check		○				Check for damage to the end effector (hand) connection cable	Check whether the end effector connection cables are unevenly twisted or damaged. If damage is found, replace the damaged cables.
	○ Only 1st check		○				Check the connection of each axis motor and other exposed connectors	Check the connection of each axis motor and other exposed connectors.
	○ Only 1st check		○				Retightening the end effector mounting bolts	Retightening the end effector mounting bolts.
	○ Only 1st check		○				Retightening the external main bolts	Retighten the robot installation bolts, bolts to be removed for inspection, and bolts exposed to the outside. Refer to the recommended bolt tightening torque guidelines at Appendix A. An adhesive to prevent bolts from loosening is applied to some bolts. If the bolts are tightened with greater than the recommended torque, the adhesive might be removed. Therefore, follow the recommended bolt tightening torque guidelines when retightening the bolts.
	○ Only 1st check		○				Check the mechanical stopper	Check that there is no evidence of a collision on the mechanical stopper, and check the looseness of the stopper mounting bolts.
	○ Only 1st check		○				Clean spatters, sawdust and dust	Check that spatters, sawdust, or dust does not exist on the robot main body. If dust has accumulated, remove it. Especially, clean the robot movable parts well (each joint, the balancer rod, the support part of in front and behind of the balancer, and the cable protection sheaths).
	○		○				Check the operation	(When cooling fans are installed on the each axis motor)

	Only 1st check						of the cooling fan	Check whether the cooling fans are operating correctly. If the cooling fans do not operate, replace them.
			○				Replacing the mechanical unit battery	Replace the mechanical unit battery.
					○		Replacing the grease of each axis reducer	Replace the grease of each axis reducer.
						○	Replacing the mechanical unit cable	Replace the mechanical unit cable. Contact ESTUN representative for information regarding replacing the cable

5.2.1. Inspection of gas spring

CAUTION

Before checking the gas spring, be sure to disconnect the controller and external power source. Set up an eye-catching sign to prevent any personnel turn on the power unintentionally, or avoid unpredictable shock accident.
Replace the gas spring when the pressure is not maintained or when wear occurs on the piston pin. Contact ESTUN for more details about replacing the gas spring.

There are two methods to check the gas spring.

Method I: check with a gas-pressure meter.

For recommended models of barometers, please consult our technical service personnel.

Procedures of checking the gas spring pressure.

a) Adjust J2-axis to 0° and then turn off the power supply.
b) Wait for the cylinder surface temperature to approach room temperature.
c) Remove the screw of the gas spring inlet.

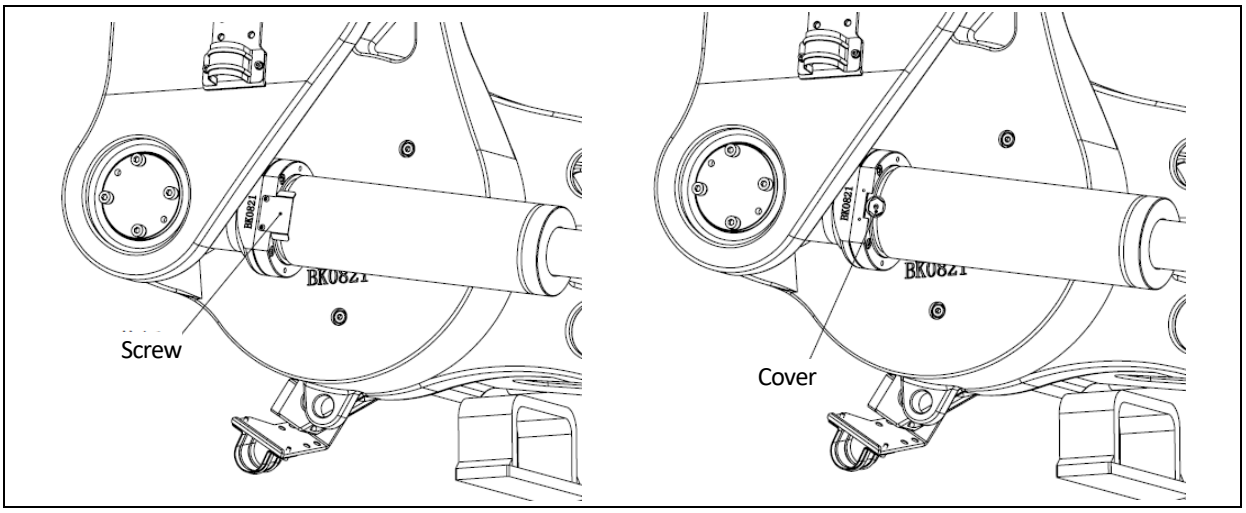

Fig 5.1 Inspection of gas spring

d) A gas pressure detection device is mounted at the air inlet and specified pressure is listed in the table below;
e) After confirming the air pressure, remove the detection device and reinstall the screw.

Tab 5.1 Gas-pressure corresponding to the surface temperature of the gas spring (ER130-2865-BD)

Surface temp / J2-axis angle	0℃	5℃	10℃	15℃	20℃	25℃	30℃	35℃	40℃
-10°	9.13 MPa	9.30 MPa	9.46 MPa	9.63 MPa	9.8 MPa	9.96 MPa	10.1 MPa	10.3 MPa	10.4 MPa

CAUTION

Each time the air pressure is confirmed, the internal pressure will be reduced by 0.05Mpa. Please inflate when the confirmation times are about 6 times.

CAUTION

When confirming the gas-pressure, the internal pressure will decrease by 0.05MPa. Fill in gas when confirmation is up to six times.

Method II: Using the software reminder function on the teach pendant.

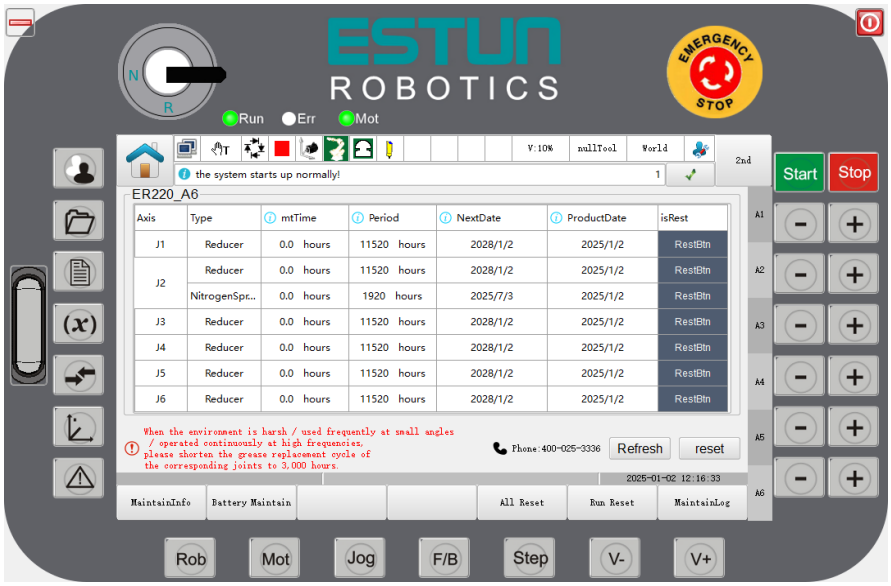

Fig 5.2 Reminder of gas spring inspection software

5.3. ADJUSTING THE BELT

This series of robot J4/J5 axis adopts synchronous belt drive, after the synchronous belt is used for a period of time, the belt tension is easy to decrease, at this time need to tension, this section mainly introduces how to tension the J4/J5 axis synchronous belt.

WARNING	**A loose timing belt may cause a reduction of robot repeatability and a shortness of belt lifetime. Use a proper force when straining the timing belt. Excessive tense may shorten the belt lifetime.**

Procedures of straining J5-axis timing belt is shown as below.

1． Disassemble the hexagonal screw M4X8 in the J4 shaft cover plate, remove the J4 shaft cover plate and bolt and place it in the storage area;

2. Disconnect the communication cable of the J5 and J6 axis motors, disassemble the I/O fixing bolts and gas pipes, loosen the cable fixing equipment (including riding cards, rolling tapes, etc.) between the J4 axis and the J6 axis, and exit the cable from the inside of the small arm rod;

3. Disassemble the bolt between the fixed plate of the J4 shaft reducer and the small arm rod, and place the removed J4-J6 shaft parts on the workbench;

4. Loosen the Allen screw M6X25 on the mounting plate of the J4 shaft motor;

5. The tensioning auxiliary fixture is fixed on the J4 axis reducer fixing plate through M5 bolts, and the M6 bolts are tightened on the J4 axis motor mounting plate through the tensioning auxiliary tooling, and the adjustment of the mounting plate (tension adjustment of the timing belt) is realized by adjusting the M6 bolts.

6. Test the tension of the timing belt on the side of the timing belt to make the timing belt tension appropriate (see the following table for the specific range);

7. Tighten the Allen screw M6X25 that fixes the motor mounting plate;

8. Remove the tensioning auxiliary tooling, use bolts to fix the J4 shaft reducer fixing plate with the small arm rod, and tighten the screws symmetrically;

9. The cable passes through the small arm rod, and the cable is fixed to the robot by horse riding card, rolling belt, etc. (cable recovery);

10. Install the J4 shaft cover plate to the small arm rod through M4X8, and the screws are tightened symmetrically.

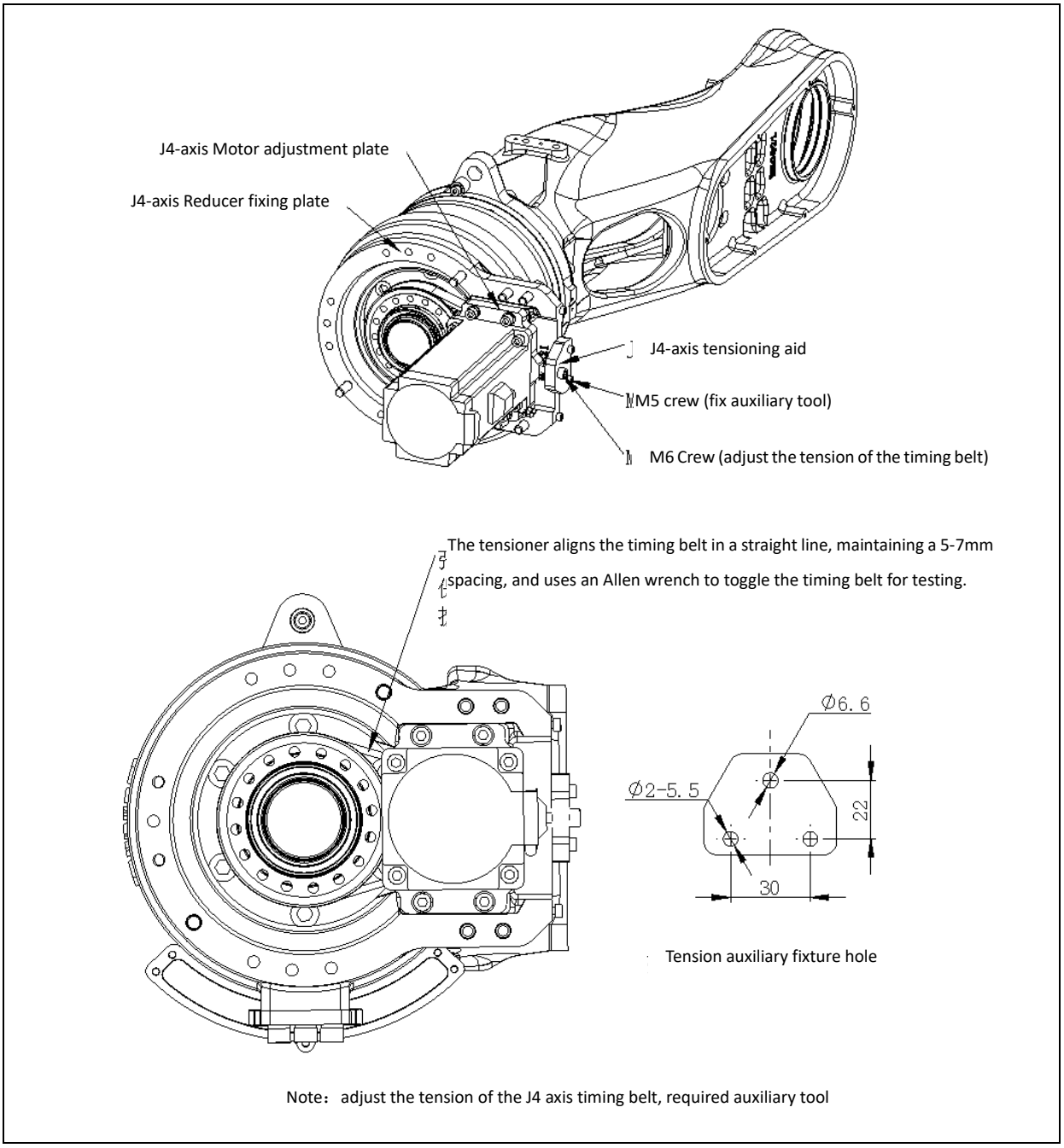

Fig 5.3 J4-axis Strain the timing belt

J5 axis tensioning timing belt steps:

1. Disassemble the hexagonal cylindrical head screw M5X20 inside the J5 shaft cover plate, remove the J5 shaft cover plate and place it in the storage area;
2. Loosen the Allen screw M6X20 on the J5 axis motor adjustment plate;
3. Adjust the adjustment device on the right side of the adjustment version, mainly adjust the M6 nut, so that the bolt tightens the J5 axis motor adjustment plate;
4. Test the timing belt tension on the side of the timing belt to make the timing belt tension appropriate (see the table below for the specific range);
5. Tighten the Allen screw M6X20 that fixes the motor adjustment plate and fix the motor adjustment plate;
5. Install the J5 axis cover plate to the wrist connector through the Allen cylindrical head screw M5X20, and the screw is tightened symmetrically.

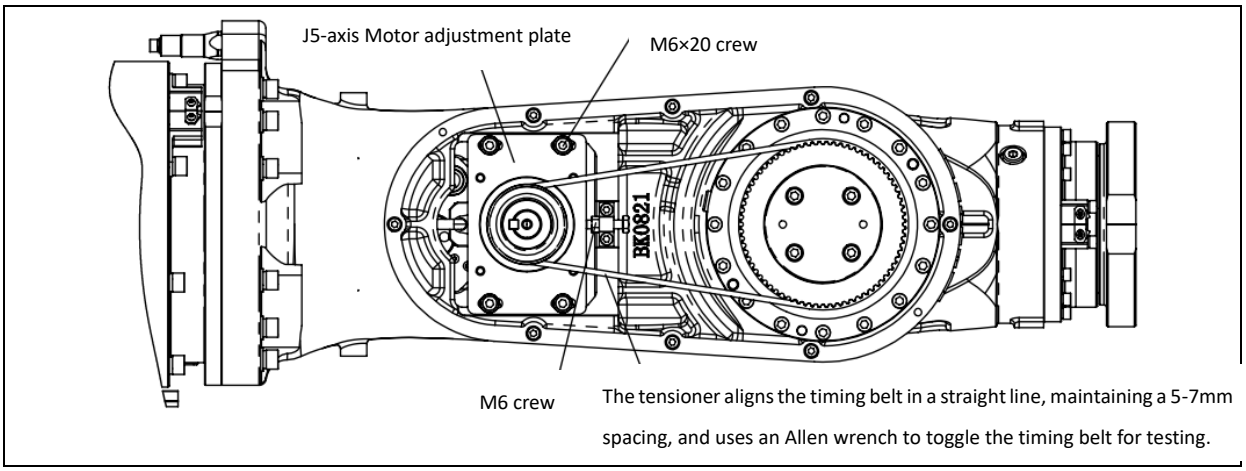

Fig 5.4 J5-axis Strain the timing belt

Tab 5.2 Timing belt tense/frequency value of ER45-2200-BD robot

Model		Range of belt tense	Range of frequency
J4-axis Belt	new belt	83.8～92.2 N	228～240 Hz
	used belt	58.7～67.0 N	191～204Hz
J5-axis Belt	new belt	90.7～99.8N	111～116Hz
	used belt	63.5～72.6N	93.2～99.7Hz

Tab 5.3 Timing belt tense/frequency value of ER80B-2565-BD robot

Model		Range of belt tense	Range of frequency
J5-axis Belt	new belt	86.5～95.1N	104～109Hz
	used belt	60.5～69.2N	87.7～93.8Hz

Tab 5.4 Timing belt tense/frequency value of ER130-2865-BD robot

Model		Range of belt tense	Range of frequency
J5-axis Belt	new belt	142~156N	88.6~93Hz
	used belt	99.4~113N	74.2～79.3Hz

When measuring, the frequency (Hz) is measured preferentially to determine the timing belt tension. When measuring with a frequency stop, the internal parameters of the tensioner do not need to be set

5.4. REPLACING THE BATTERY

The position data of each axis is preserved by the backup batteries. The batteries need to be replaced every one year. Also use the following steps to replace the batteries when voltage drop alarm occurs.

Procedures of replacing the battery:

1. Press the emergency stop button to avoid any dangerous situation.
2. Remove the cover of the battery box.
3. Take out the old battery from the box.
4. Fix the new battery into the battery box. Make sure the direction is correct.
5. Fix the cover of the battery box.

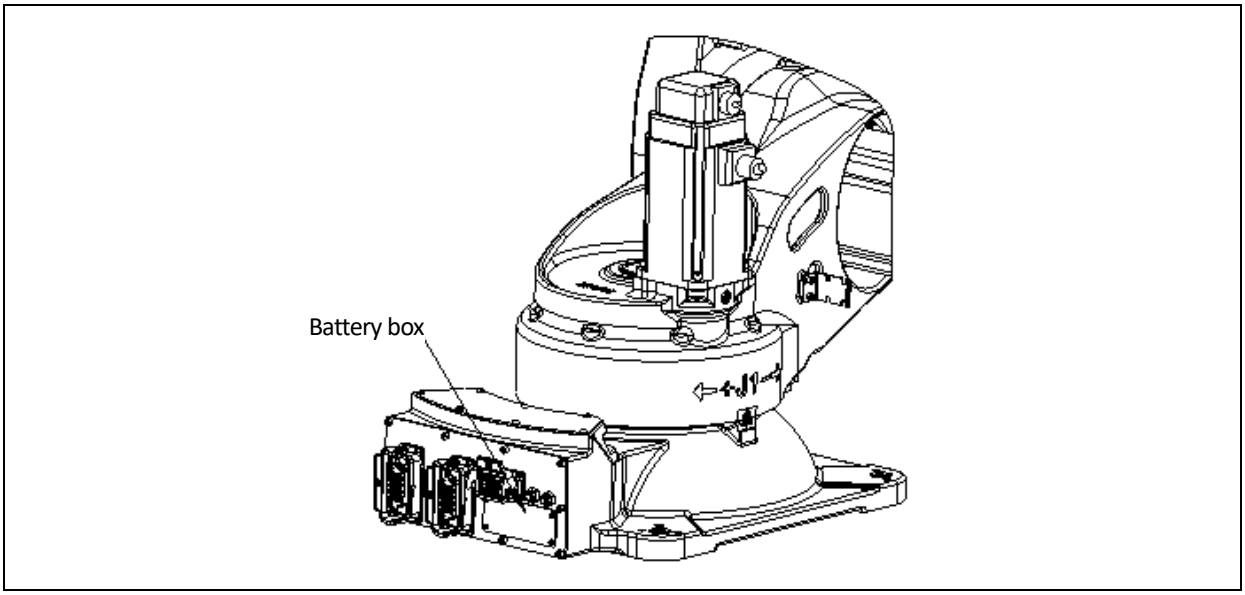

Fig 5.5 Battery replacing(ER45-2200-BD)

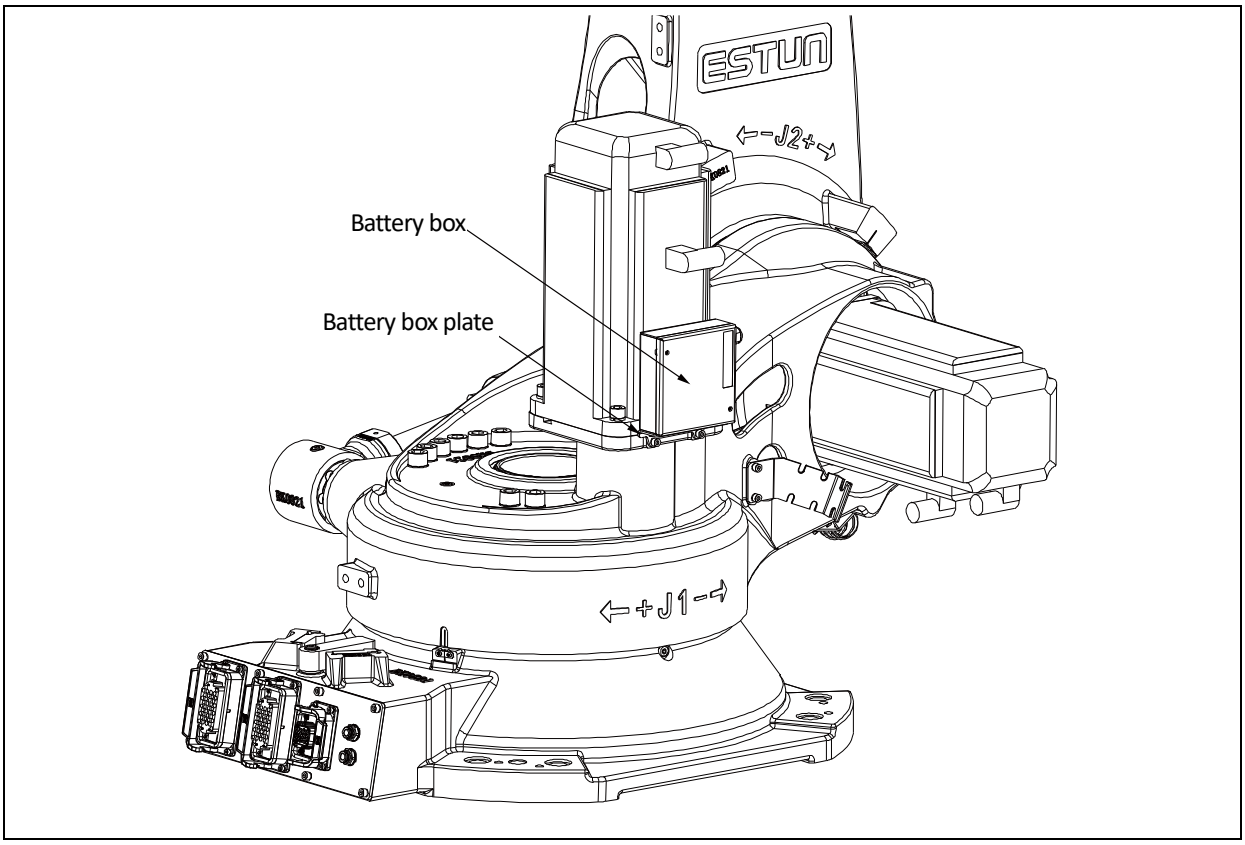

Fig 5.6 Battery replacing(ER80B-2565-BD,ER130-2865-BD)

CAUTION

Be sure to keep the power on. If the power is cut off during replacing, the position data will lost. Therefore, calibration will be required again.

5.5. GREASING

Greasing is required to each part every 3 years, or for a cumulative operation time of 11520 hours, whichever occurs first, according to the following steps. Refer to the table below for the brand and quantities of the grease applied to each joint.

> CAUTION
>
> **When the robot operates in harsh environments, experiences frequent small-angle movements, or runs continuously at high frequencies for extended periods, it is recommended to shorten the lubricant replacement interval for the corresponding joints to 3000 hours.**

> CAUTION
>
> **Failure to replace the specified grease in a timely manner or in accordance with the specifications may result in the following problems:**
>
> - **Joint grease leakage pollutes the external environment and equipment.**
> - **Motor grease intake causes motor brake failure or encoder contamination, or even shaft loss.**
> - **Synchronous belt grease intake causes slippage and even breakage.**

Tab 5.5 Replacing the grease periodically

Model	Position	Quantity
ER45-2200-BD	J1-axis reducer	3565ml
	J2-axis reducer	1610ml
	J3-axis reducer	1175ml
	J5-axis reducer	140ml
	J6-axis reducer	230ml
	J6-axis reducer	240ml
ER80B-2565-BD	J1-axis reducer	4100ml
	J2-axis reducer	2700ml
	J3-axis reducer	1600ml
	J4-axis reducer	750ml
	J5-axis reducer	300ml
	J6-axis reducer	350ml
ER130-2865-BD	J1-axis reducer	4100ml
	J2-axis reducer	2950ml
	J3-axis reducer	2850ml
	J4-axis reducer	1220ml
	J5-axis reducer	330ml
	J6-axis reducer	410ml

Recommend greasing gesture is list below.

Tab 5.6 Robot joint greasing angle (ER45-2200-BD)

Position	Gesture					
	J1	J2	J3	J4	J5	J6
J1-axis reducer	Any	Any	Any	Any	Any	Any
J2-axis reducer		0°				
J3-axis reducer			0°			
J5-axis reducer				0°	0°	
J6-axis reducer					+90°	

Tab 5.7 Robot joint greasing angle (ER80B-2565-BD)

Position	Gesture					
	J1	J2	J3	J4	J5	J6
J1-axis reducer	Any	Any	Any	Any	Any	Any
J2-axis reducer		0°				
J3-axis reducer			0°			
J4-axis reducer				0°		
J5-axis reducer				+90°	+90°	
J6-axis reducer				0°		

Tab 5.8 Robot joint greasing angle (ER130-2865-BD)

Position	Gesture					
	J1	J2	J3	J4	J5	J6
J1-axis reducer	Any	Any	Any	Any	Any	Any
J2-axis reducer		0°				
J3-axis reducer			0°			
J4-axis reducer				+60°		
J5-axis reducer				0°	-90°	
J6-axis reducer					+90°	

5.5.1. Position of grease inlet/outlet on each axis

CAUTION **Follow the instructions in the safety chapter when greasing the reducer.**

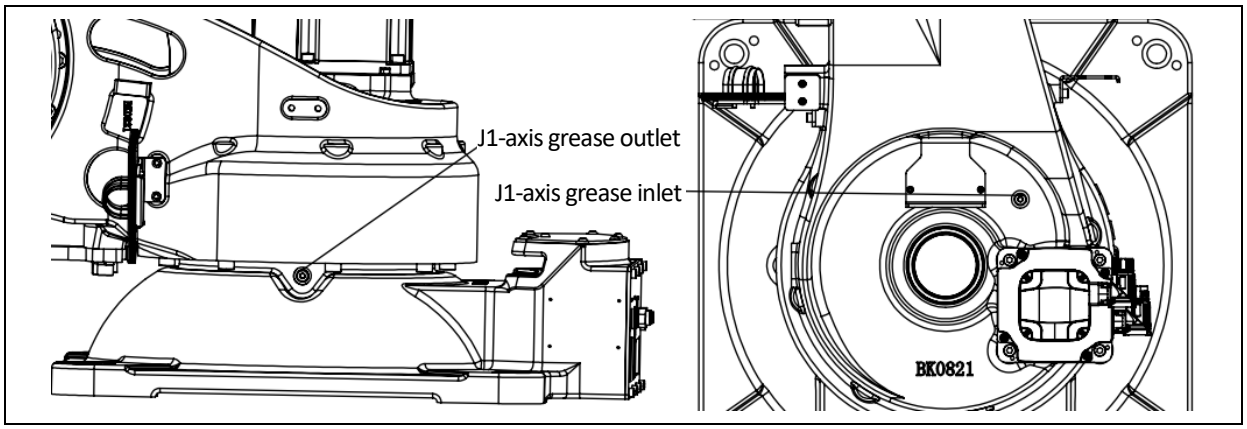

Fig 5.7 J1-axis grease inlet/outlet (ER45-2200-BD)

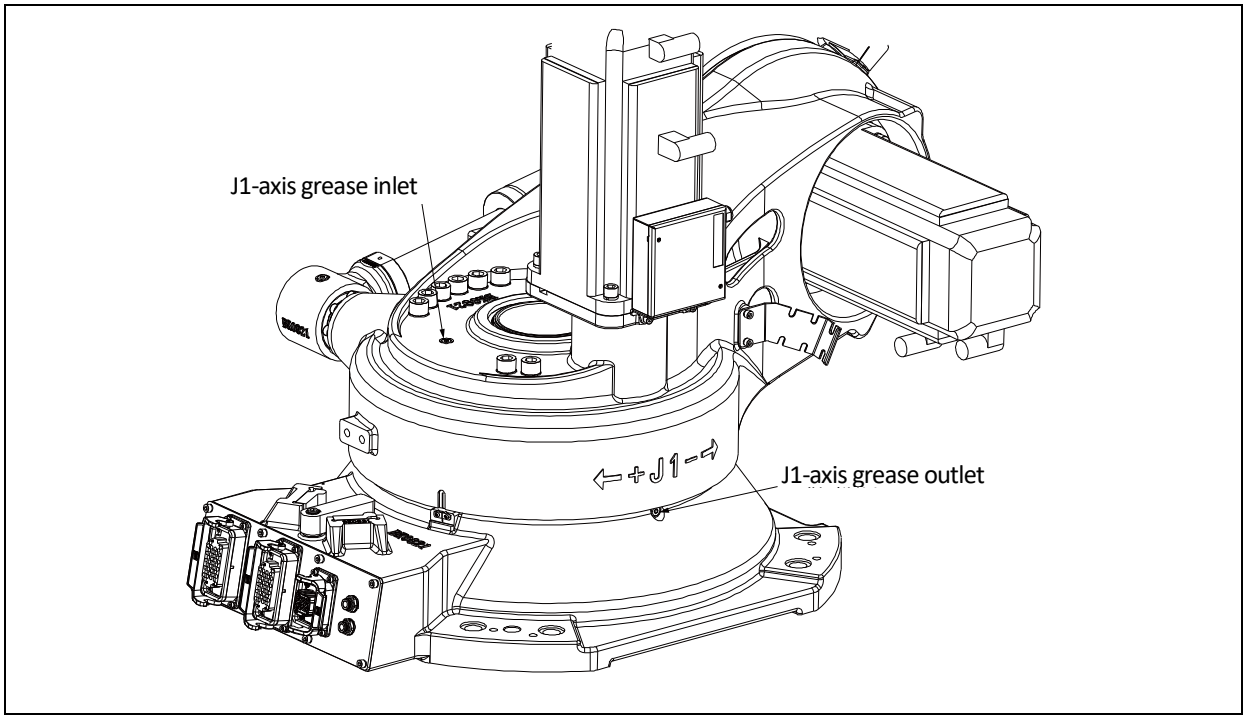

Fig 5.8 J1-axis grease inlet/outlet(ER80B-2565-BD,ER130-2865-BD)

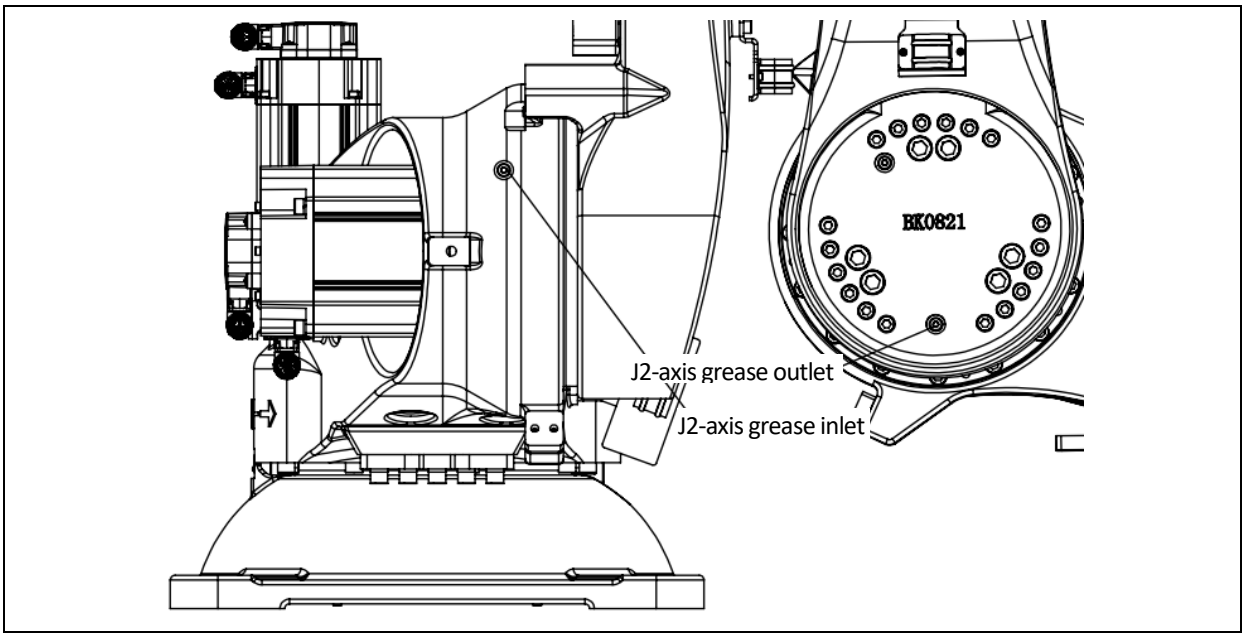

Fig 5.9 J2-axis grease inlet/outlet(ER45-2200-BD)

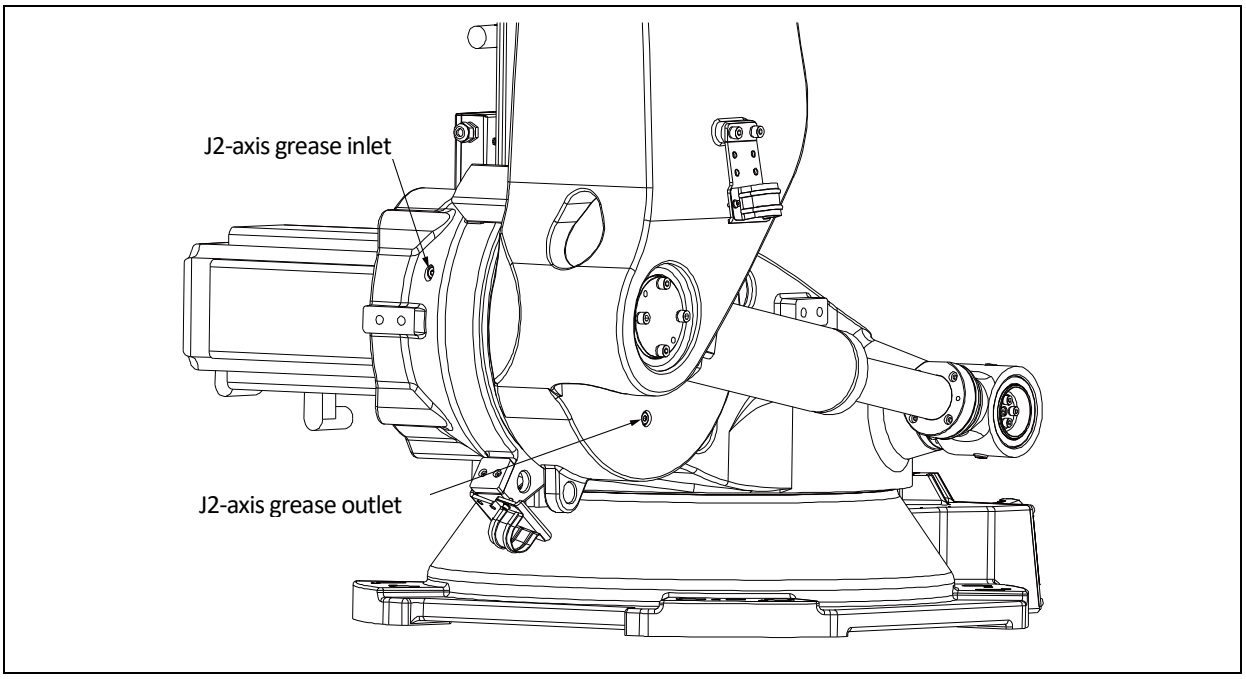

Fig 5.10 J2-axis grease inlet/outlet(ER130-2865-BD)

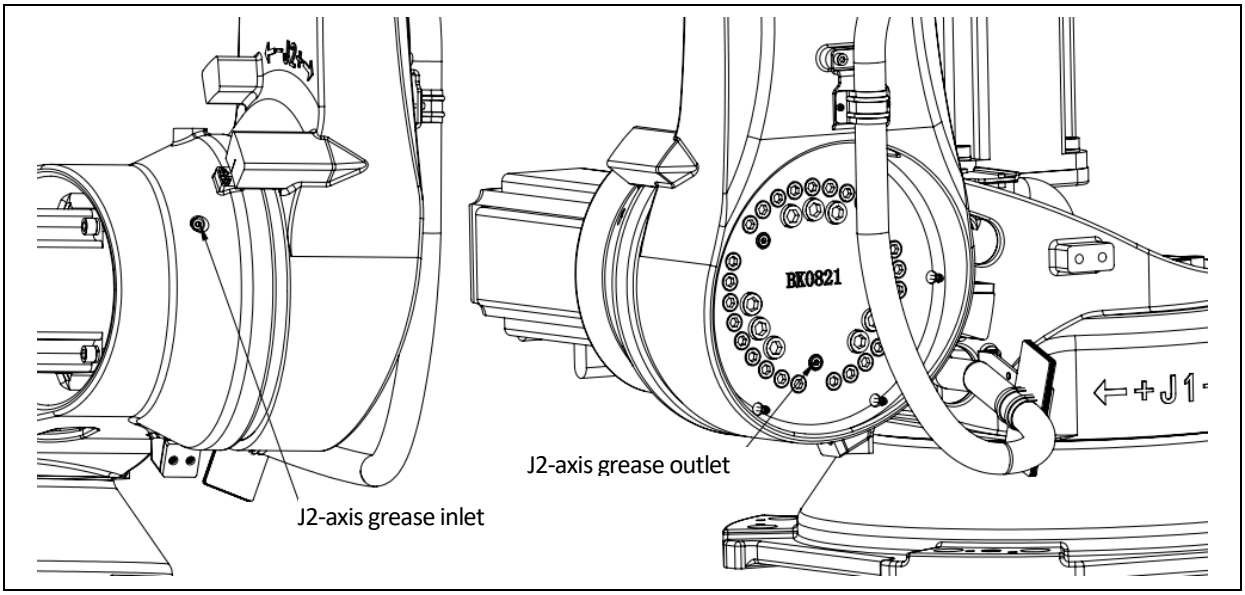

Fig 5.11 J2-axis grease inlet/outlet(ER80B-2565-BD)

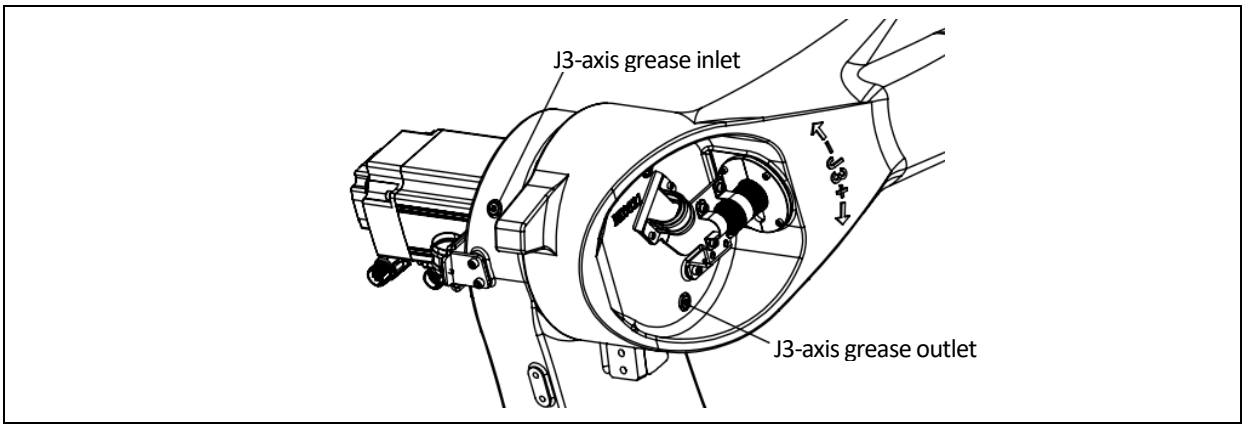

Fig 5.12 J3-axis grease inlet/outlet (ER45-2200-BD)

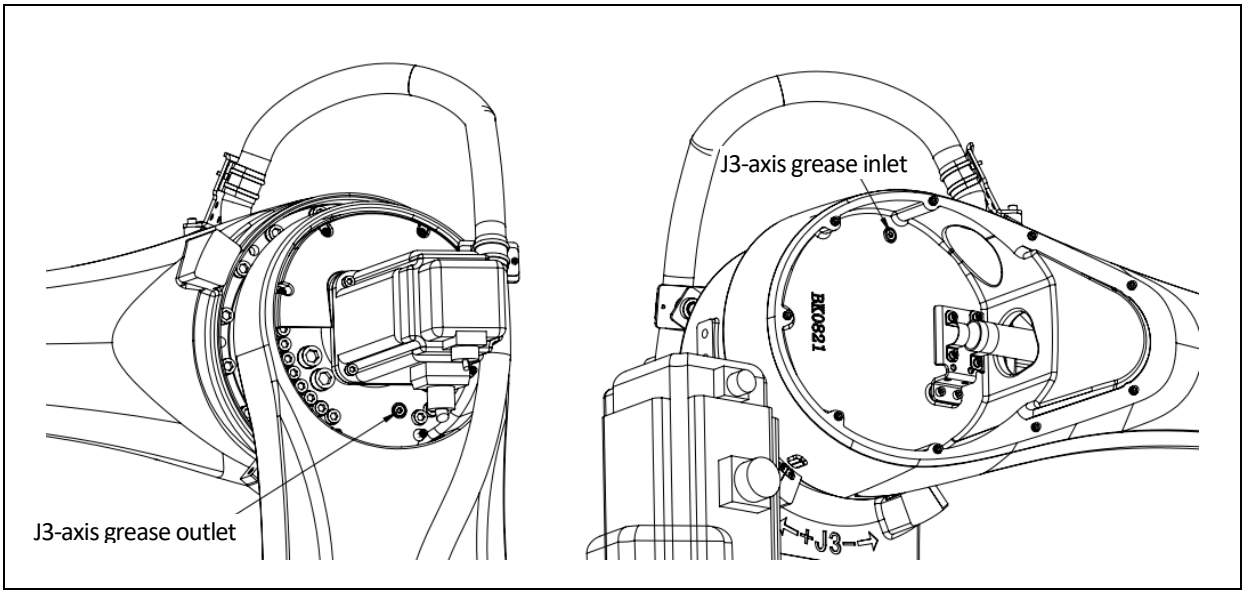

Fig 5.13 J3-axis grease inlet/outlet (ER80B-2565-BD)

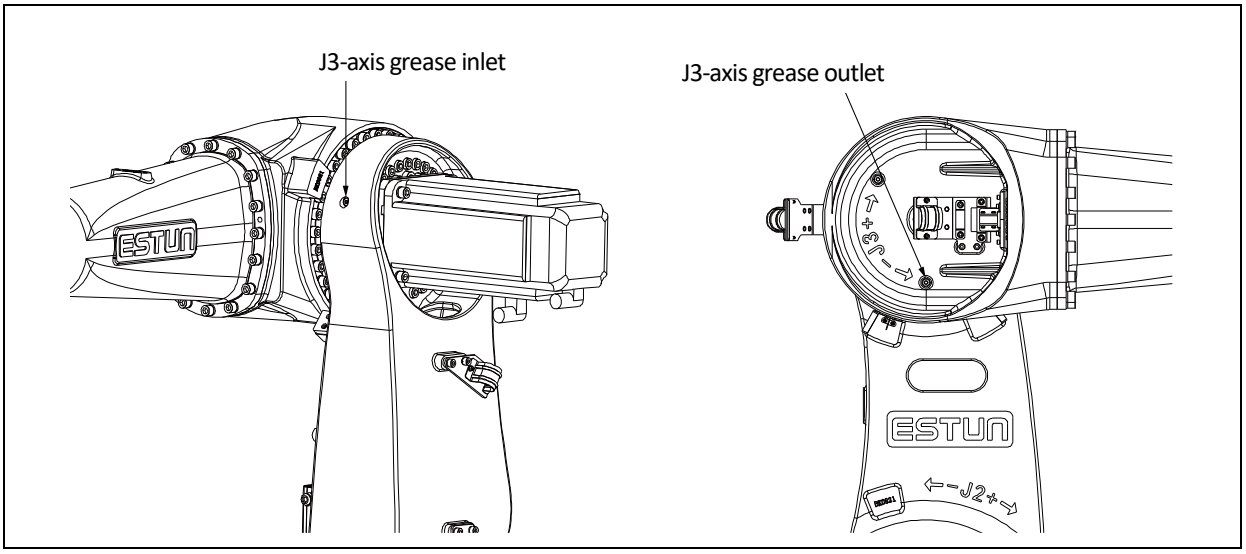

Fig 5.14 J3-axis grease inlet/outlet (ER130-2865-BD)

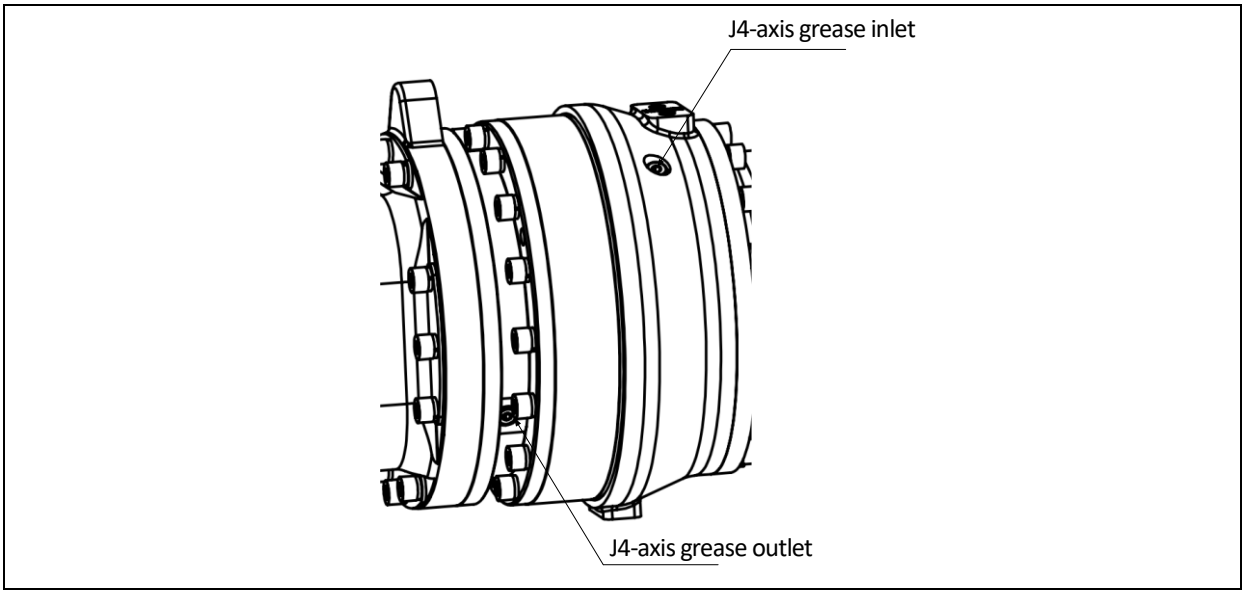

Fig 5.15 J4-axis grease inlet/outlet(ER130-2865-BD)

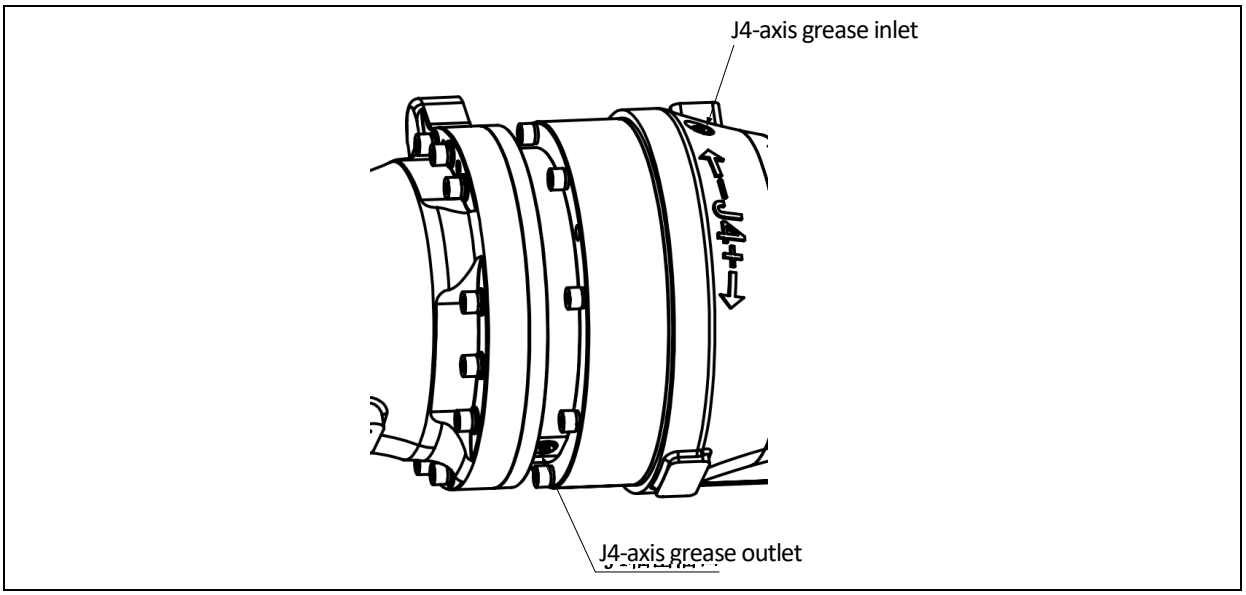

Fig 5.16 J4-axis grease inlet/outlet(ER80B-2565-BD)

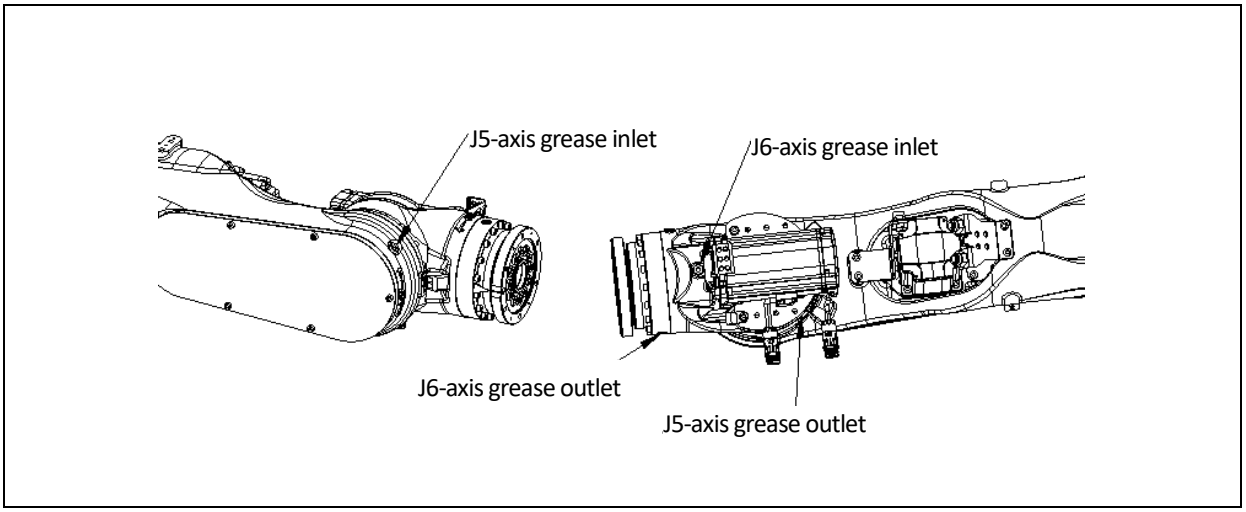

Fig 5.17 J5/6-axis grease inlet/outlet(ER45-2200-BD)

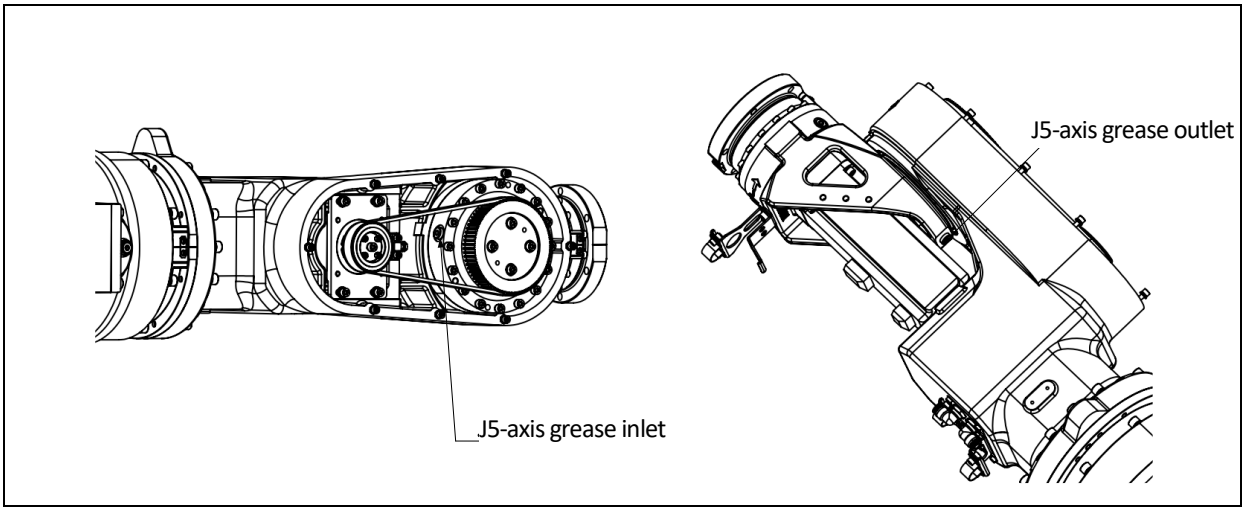

Fig 5.18 J5-axis grease inlet/outlet (ER80B-2565-BD)

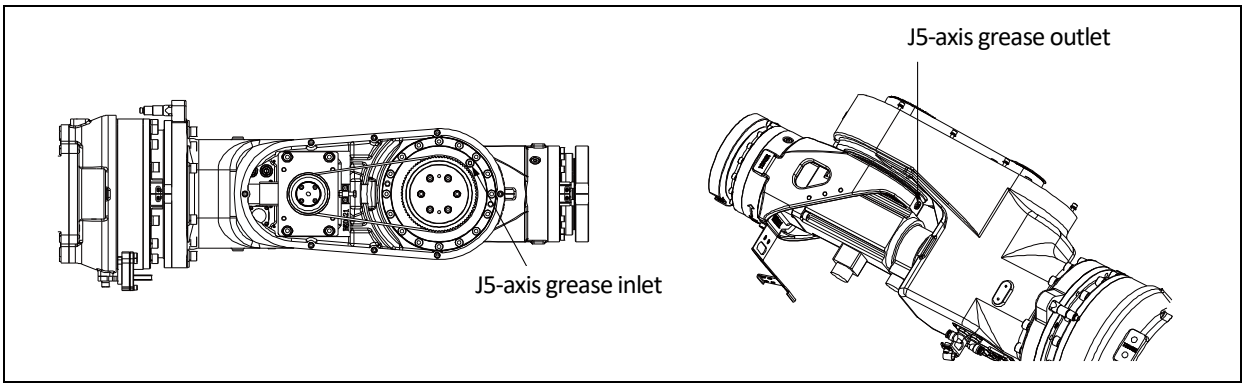

Fig 5.19 J5-axis grease inlet/outlet (ER130-2865-BD)

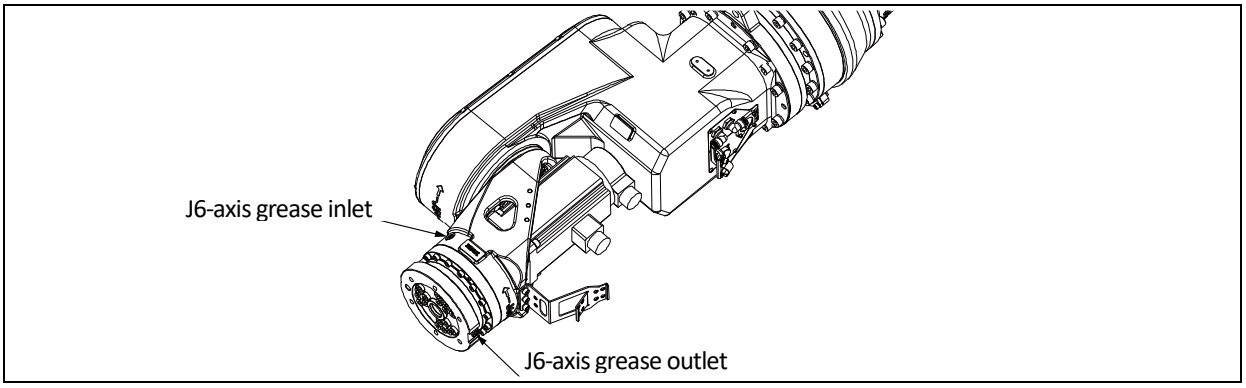

Fig 5.20 J6-axis grease inlet/outlet(ER80B-2565-BD, ER130-2865-BD)

5.5.2. Procedures of greasing

The following steps only applied to operation of reducers of J1, J2, J3, and J4 axes.

a) Teach each joint to run at a speed of 100% for 10-20min, to make the grease into grease with low viscosity.
b) Move the robot to the gesture of greasing, then turn off the power supply.
c) Put an grease recycle container beneath the grease outlet.
d) Remove the screw on the inlet and outlet of each joint.
e) Inject new grease via the grease inlet until new grease goes out of the outlet. The amount of grease injected should be equal to the amount that is discharged (including those discharged after warming up the machine).
f) Release the residual pressure in the grease groove according to section 5.5.3.
g) Install the screw to grease inlet and outlet with a torque of 13.7N·m.

If greasing is not performed properly, the internal pressure inside the grease bath may increase suddenly, which will damage the seal part, resulting in grease leakage and abnormal operation. Therefore, when performing greasing, observe the following precautions.

- Open the grease bath vent (remove the screw on the grease outlet) before greasing.
- Inject the grease/grease slowly without excessive force.
- Avoid compressed gas pump (powered by factory gas source) whenever possible.
- Use specified model of grease/grease. Unauthorized model of grease may cause damage to the reducer or other problems.
- When greasing is completed, make sure that there is no grease/grease leakage outside the outlet. and the grease bath is not pressurized. Then close the outlet.
- Clean the excess grease/grease on the floor to avoid accidents such as slipping or fire.

5.5.3. Procedure for releasing remaining pressure within the grease bath

Release remaining pressure with the following procedures. Attach bags under the grease outlet to prevent spilled grease/grease from splattering.

a) Power the robot, and operate at a 100% speed with full load for 4 hours continuously.
b) Stop the running program of the robot at zero position, turn off the servo power with the teach pendant.
c) Disassemble the screw at grease inlet of each axis after safety confirmation. Do not face the screw when removing it, in case that grease with high pressure and high temperature ejects, resulting personnel injury.
d) Retighten the screw 3% seconds later after removing it, and clean up the grease around the screw with a clean cloth.

e) Be sure to complete pressure releasing of a robot (step c and step d) in 15 minutes. Otherwise, it should be repeated from step 1.

5.6. Grease leakage inspection

Parts to be checked

Please check for grease leakage from each joint seal.

Measurements:

- Depending on the operating conditions and working environment, there may be a trace amount of grease adhering to the outside of the lip of the grease seal. As the robot operates for a long period of time, this grease may gradually accumulate into a water droplet shape and drip off. Accumulation of grease can be effectively prevented by cleaning the grease adhering to the outside of the lip of the grease seal before operation.
- In addition, if the temperature of the drive section is too high, the pressure inside the joint grease chamber may increase abnormally. In this case, the internal pressure can be restored by opening the grease fill port once just after the end of operation. (When opening the grease fill port, take care to avoid splashing grease.)

CAUTION	**When you open the grease filler port, high-temperature grease may splash out, so use a plastic bag or the like under the grease filler port beforehand. In addition, use heat-resistant gloves, protective eyewear, masks, protective clothing, etc., as necessary.**

- If the frequency of wiping off the grease is high and there is no improvement in restoring the internal pressure in the grease chamber by opening the grease filling port, follow **7.2 Common Problems and Treatment** (Symptoms: Gear Box Grease Seepage and Leakage).

5.7. Warranty

During the warranty period, if the user repairs or maintains this product through unofficial channels not recognized by Estun on their own, or uses spare parts provided by unofficial channels not recognized by Estun, or modifies the product on their own, Estun will no longer provide warranty service for this product from the date of occurrence of such behavior. Any losses or consequences resulting therefrom shall be borne by the user.

6. Calibrating

6.1. INTRODUCTION

Calibration associates the angle of each robot axis with the pulse count value supplied from the absolute Pulsecoder connected to the corresponding axis motor. To be specific, calibration is an operation for obtaining the pulse count value, corresponding to the zero position.

Calibration is factory-performed. It is unnecessary to perform calibration in daily operation. However, calibration becomes necessary after:

- Motor replacement
- Pulsecoder replacement
- Reducer replacement
- Cable replacement
- Backup batteries for pulse count in the mechanical unit has run out

CAUTION	**Robot data (including calibration data) and pulsecoder data are backed up by their respective backup batteries. Data will be lost if the batteries die. Replace the batteries in the controller and mechanical units periodically. An alarm will occur when battery voltage is low.**

6.2. QUICK ZERO POSITION CALIBRATION

Quick zero calibration is performed at factory with all loads uninstalled using special apparatus. Based on the robot parameter, this method provides the most precise zero position calibration.

Quick zero position calibration can reload zero position data that stored in the controller, when zero position data lost due to electrical or software faults. If the zero position data lost due to disassembly or maintenance, this method cannot be used.

ESTUN robot uses encoder data as an auxiliary of calibration. Procedures are shown below.

a) Manually operate the robot and align the axis with two zero reference marks.

b) Open the encoder information display interface and compare the current actual single-turn data with the previously calibrated reference single-turn data. Adjust the axis at a lower speed to make the current single-turn data closely match the reference single-turn data.

c) Click the "Homing Axis" button on the interface of the teach pendant, select the corresponding return to zero axis, and set it to the factory “Set Scalling Value” to return to zero.

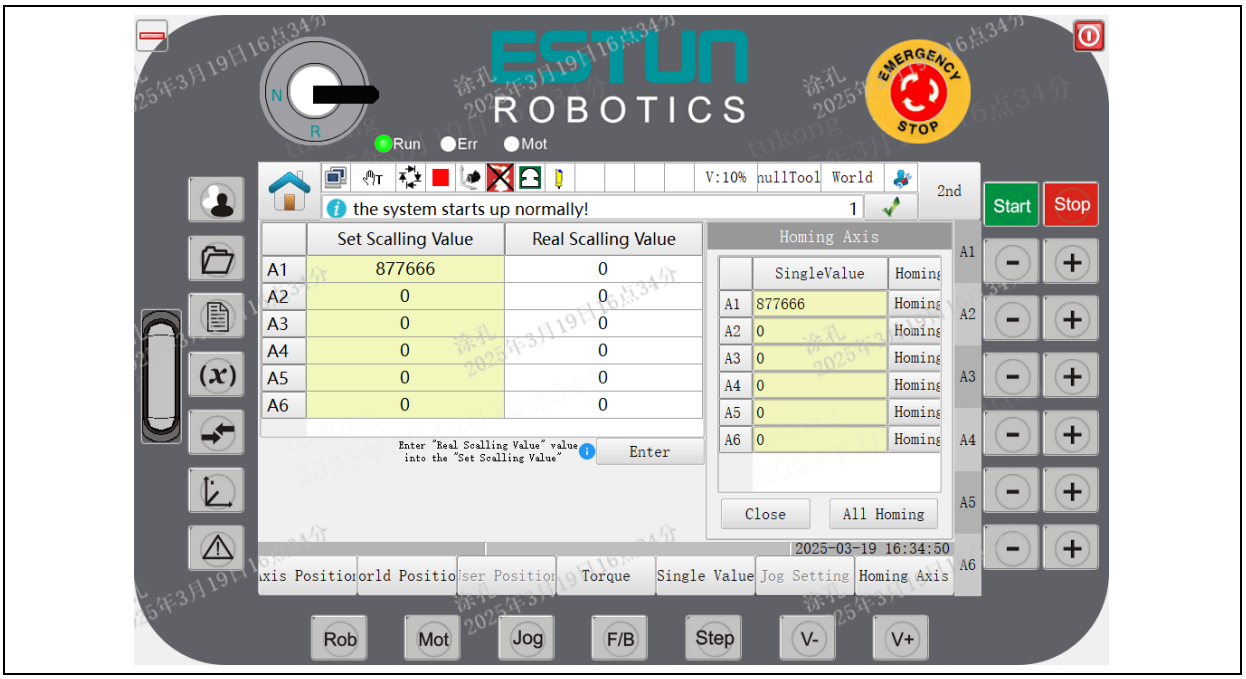

Fig 6.1 Quick zero calibration single-turn value

6.3. MECHANICAL ZERO POSITION CALIBRATION

Mechanical disassembly or maintenance may cause zero position data lost. Mechanical zero position calibration is performed with all six axes jogged to zero-position by using their respective witness marks.

6.3.1. J1-axis calibration

Take J1-axis for example of zero position calibration. As shown in the figure below, there are witness marks on the base and rotation base. Move the axis to align the marks as the procedures below.

a) Move J1-axis with teach pendant to align two witness marks.

b) Set this position as the zero position of J1-axis with the teach pendant.

Perform calibration for each axis with procedures recommended above. If calibration for all axes has been performed and recorded, zero position for each axis can be set with teach pendant. Figures in this section are reference for calibration of other axes.

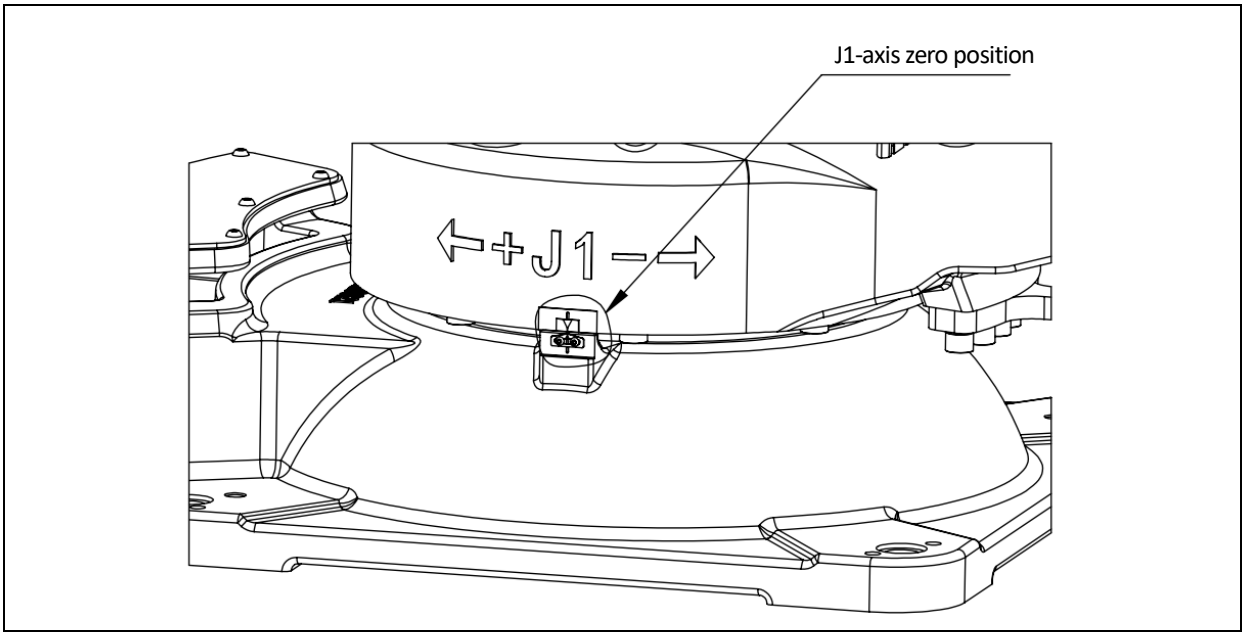

Fig 6.1 Calibration for J1-axis(ER45-2200-BD)

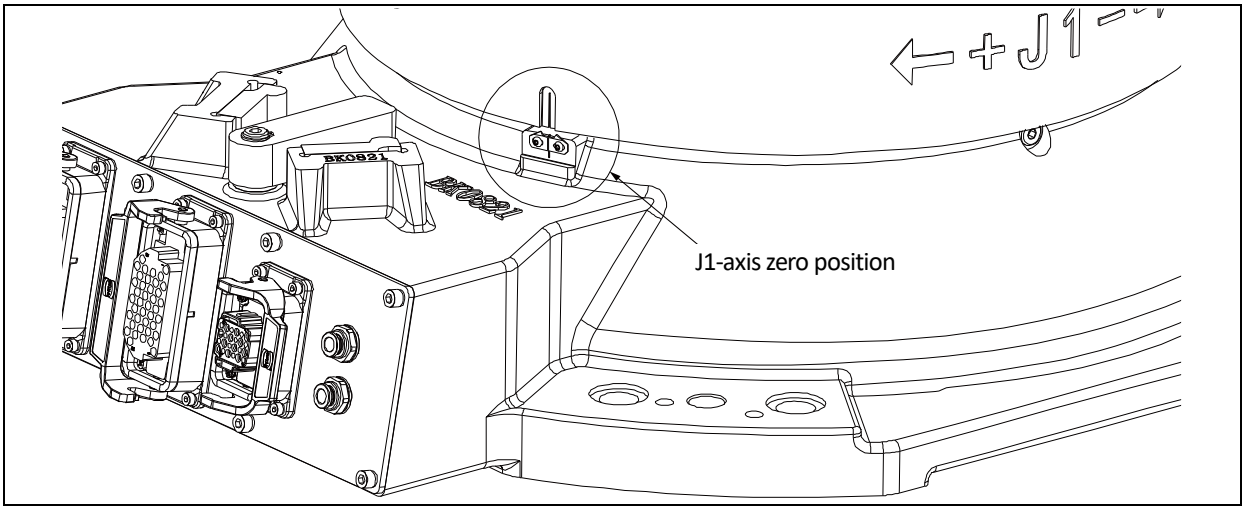

Fig 6.2 Calibration for J1-axis(ER80B-2565-BD ,ER130-2865-BD)

6.3.2. J2-axis calibration

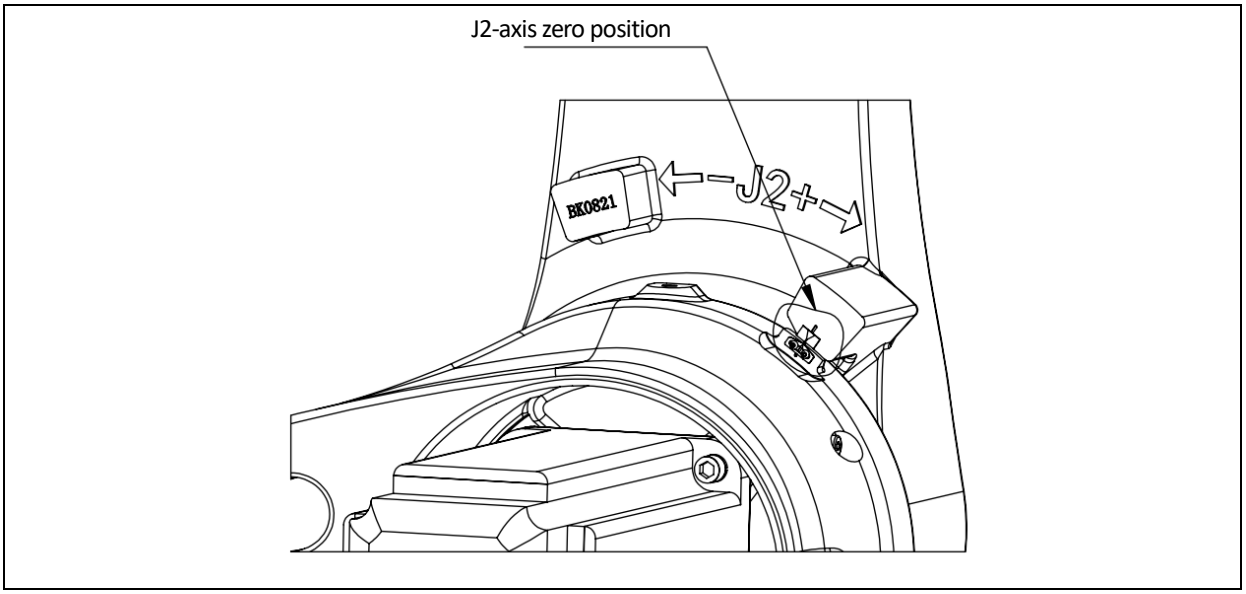

Fig 6.3 Calibration for J2-axis (ER45-2200-BD)

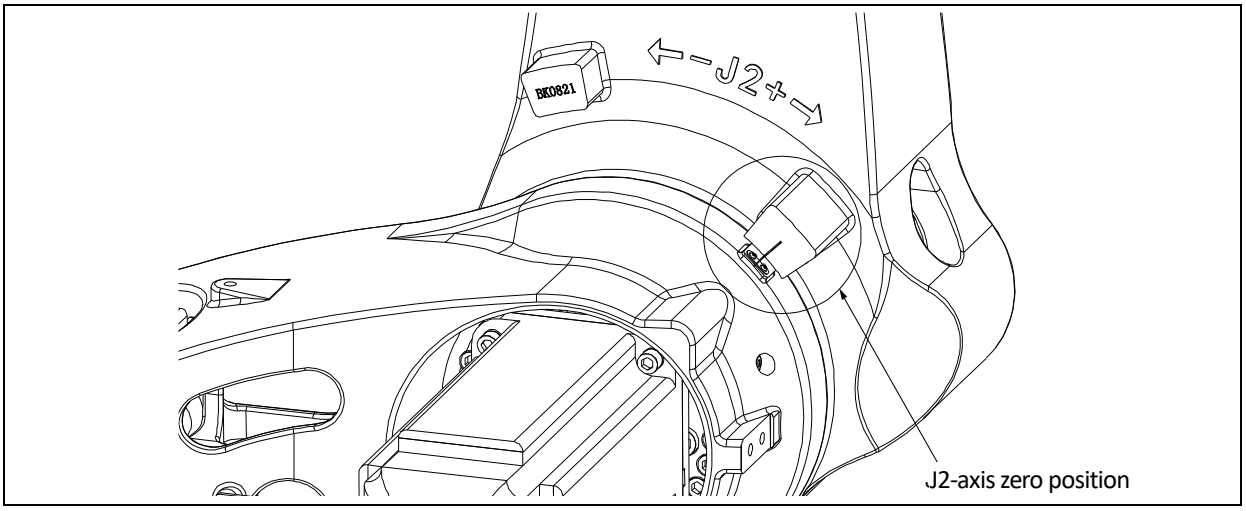

Fig 6.4 Calibration for J2-axis (ER80B-2565-BD ,ER130-2865-BD)

6.3.3. J3-axis calibration

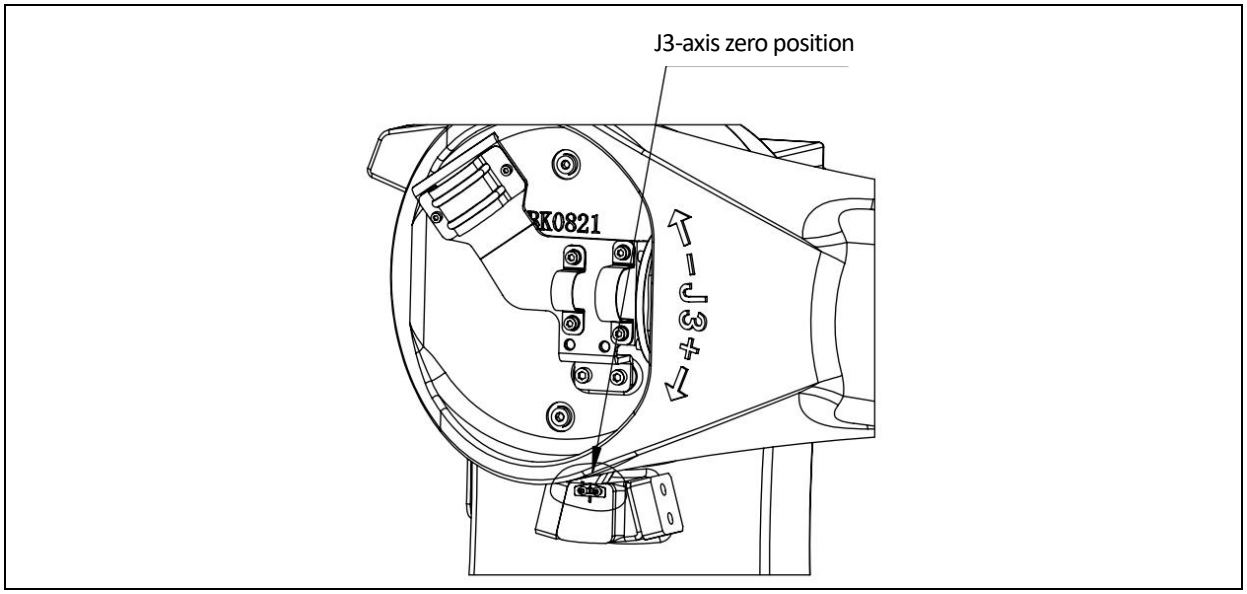

Fig 6.5 Calibration for J3-axis (ER45-2200-BD)

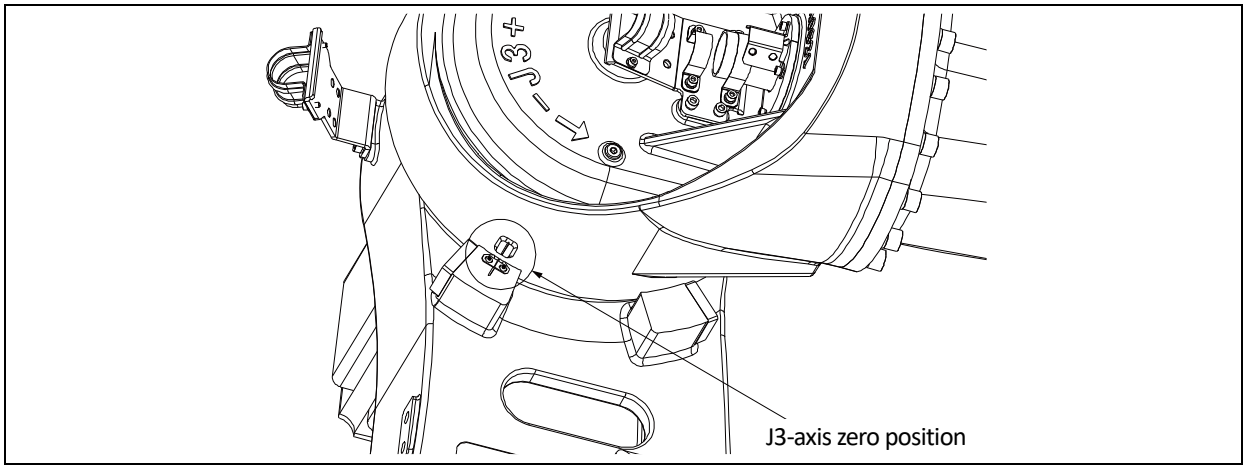

Fig 6.6 Calibration for J3-axis (ER80B-2565-BD ,ER130-2865-BD)

6.3.4. J4-axis calibration

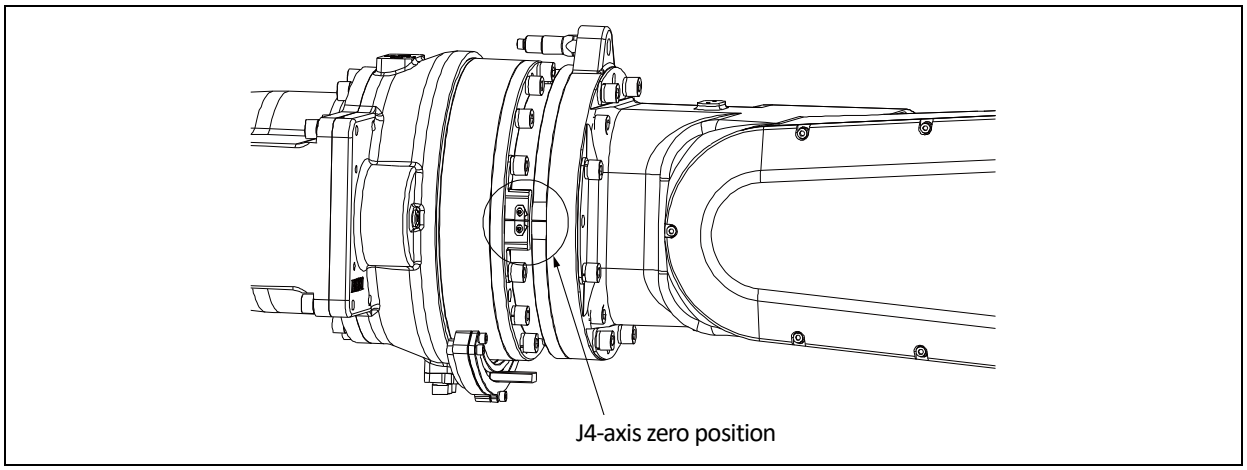

Fig 6.7 Calibration for J4-axis (ER130-2865-BD)

6.3.5. J5/J6 axis calibration

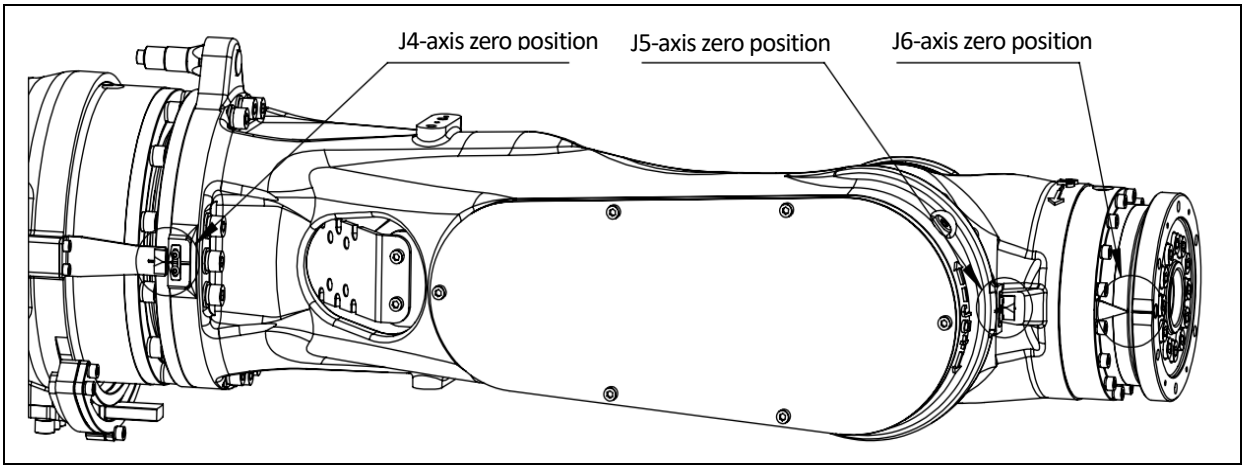

Fig 6.8 Calibration for J5/J6 axis (ER45-2200-BD)

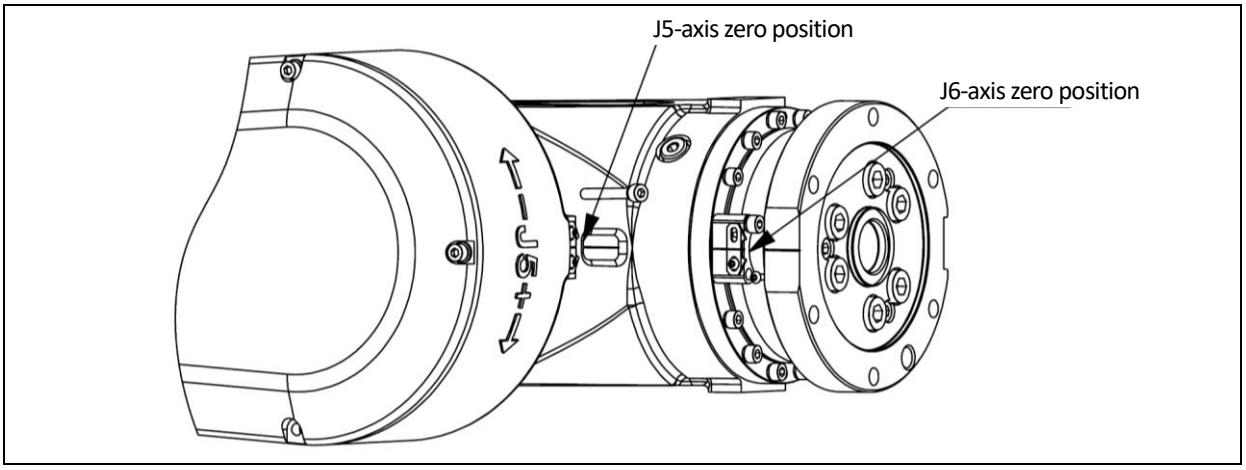

Fig 6.9 Calibration for J5/J6 axis (ER80B-2565-BD, ER130-2865-BD)

7. Troubleshooting

Be sure to read SAFETY PRECAUTIONS and understand its contents before any maintenance.

> **CAUTION** **Never perform any maintenance unless the power of the robot system is turned off.**

7.1. TOOLS

Troubleshooting tools includes travelling crane, forklift, internal hexagonal wrench, monkey wrench and special tools for removing the bearings.

7.2. TROUBLESHOOTING

Symptom	Description	Cause	Measure
Vibration noise	Unfirm connection between base and floor.	Frequent vibration due to robot operation causes unfirm connection.	Reinforce the connection between robot base and floor.
	Joint connection is loose.	It is likely caused by a loose bolt, or lack of bolt fastening measures (such as screw fastening agent, spring washer) on the joint.	Re-mount and re-fasten the bolts.
	Vibration becomes serious when the robot is at a certain speed.	The robot control program is too demanding for the robot hardware.	Modify the control program.
	Vibration becomes serious when the robot adopts a specific posture.	It is likely the robot is overloaded.	Reduce the robot load.
	Damaged reducer.	Prolonged usage of the reducer.	Replace the reducer.
	Vibration occurs after the robot collided with an object or was overloaded for a long period.	The reducer or the joint structure was damaged due to collision or overload.	Replace the reducer or structure where the vibration occurs.
	Some relationship may occur between the robot and the machine near it.	The robot resonates with the machine near it.	Change the distance between the robot and the other machines.

Symptom	Description	Cause	Measure
Click	The robot wobbles due to push by hand when turn off it.	Bolts in the robot joint loosen due to overload or collision.	Check tightness of motor retaining bolt, reducer retaining bolt, reducer retaining bolt and mounting bolt of each joint. If any bolt is loose, re-tight it.
Motor overheat	The motor overheated due to the ambient temperature rose or a cover was attached to the motor.	Ambient temperature roses or the motor is overheated, and could not release the heat.	Reduce the ambient temperature, make ventilation well and remove the cover of the motor.
	Changing the robot control program or the load.	Program or load is too demanding for the robot.	Modify the program and reduce the load.
	Parameters imported to the controller are changed, the motor overheated.	Parameters imported are not correct with the robot.	Import correct parameters.
Gear case grease leakage	Grease leakage from the joint.	Prolonged usage of the robot leads to a damage of the grease seal.	Replace the grease seal and O-ring.
		There is a gap on the surface of the seal.	Re-mount and tighten the grease seal.
		There is a problem with the grease inlet or outlet.	Replace the grease inlet or the bolt.
Dropping joint	The robot axis cannot stop at a certain position, or drops in standstill due to gravity.	There is a problem with the servo motor brake.	Replace the servo motor.

7.3. REPLACING THE SERVO MOTOR

Contact ESTUN representative if servo motor replacement is needed.

WARNING

When removing some parts of the robot, other parts may lose support, thus leads to unexpected movement, and cause personnel injury and equipment damage. Disassembling of the robot must been performed by authorized person.

CAUTION

When replacing servo motors, the disassembled parts should be kept properly and cleaned thoroughly before remounting. Replace it when damage occurs.

Appendix

APPENDIX A BOTL TORQE LIST

Bolt Models (GB/T 70.1)	M3	M4	M5	M6	M8	M10	M12	M14	M16	M18
Tightening Torque /N.m (Level 12.9)	2	4	9.01 ±0.49	15.6 ±0.78	37.2 ±1.86	73.5 ±3.43	129 ±6.37	205 ±10.2	319 ±15.9	441 ±22

APPENDIX B SPECIFICATION OF BOLT

Nominal diameter	**Screw dimension**	**Drill diameter**	**Anchor depth(mm)**	**Max. anchor thickness(mm)**	**Designed pulling force(kN)**	**Designed shearing force(kN)**	**Anti-pull force(kN)**
M8	φ8×110	φ10	80	13	10.3	12.3	≥20KN
M10	φ10×130	φ12	90	20	12.3	14.2	≥30KN
M12	φ12×160	φ14	110	25	16.8	17.5	≥40KN
M16	φ16×190	φ18	125	35	28.9	35	≥60KN
M20	φ20×260	φ25	170	65	50.1	51.5	≥90KN
M24	φ24×300	φ28	210	65	75.5	80	≥140KN
M30	φ30×380	φ35	280	70	121.3	163.7	≥200KN
M33	φ33×420	φ38	300	90	135	182	≥260KN

APPENDIX C Part list for ER45-2200-BD

No.	SAP	Name	Amount	Note
1	12700000361	Servo motor (J1-axis)	1	
2	12800000014	Servo motor (J2-axis)	1	
3	12700000298	Servo motor (J3-axis)	1	
4	12700000222	Servo motor (J4, J5-axis)	2	
5	12700000221	Servo motors (J6-axes)	1	
6	51200000073	belt Lithium battery ER34615M	3	
7	G5400000193	Timing	1	
8	G5400000415	Timing	1	

APPENDIX E Part list for ER80B-2565-BD

No.	SAP	Name	Amount	Note
1	31521100006	Lithium battery ER34615M/2	1	
2	12503231001	Servo motor (J1-axis)	1	

3	12503231002	Servo motor (J2-axis)	1	
4	12502232008	Servo motor (J3-axis)	1	
5	12700000063	Servo motors (J4, J6 axes)	2	
	12700000078	Servo motor (J3-axis)	1	
6	G5400000310	Timing belt	1	

APPENDIX F Part list for ER130-2865-BD

No.	SAP	Name	Amount	Note
1	31521100006	Lithium battery ER34615M/2	1	
2	12503231001	Servo motors (J1, J2, J3 axes)	3	
3	12509131018	Servo motors (J4, J5, J6 axes)	3	
4	G5401000076	Timing belt	1	
5	48300001112	Nitrogen spring	1	

NANJING ESTUN ROBOT ENGINEERING CO., LTD.

1888 Jiyin Avenue, Jiangning Economic Development Zone, Nanjing City

+86-25-58328532 www.estun.com

+86-25-52785576 export@estun.com